Condition 30

Appendix 5A2

Edmonton Terminal Single Line Diagrams (SLD)

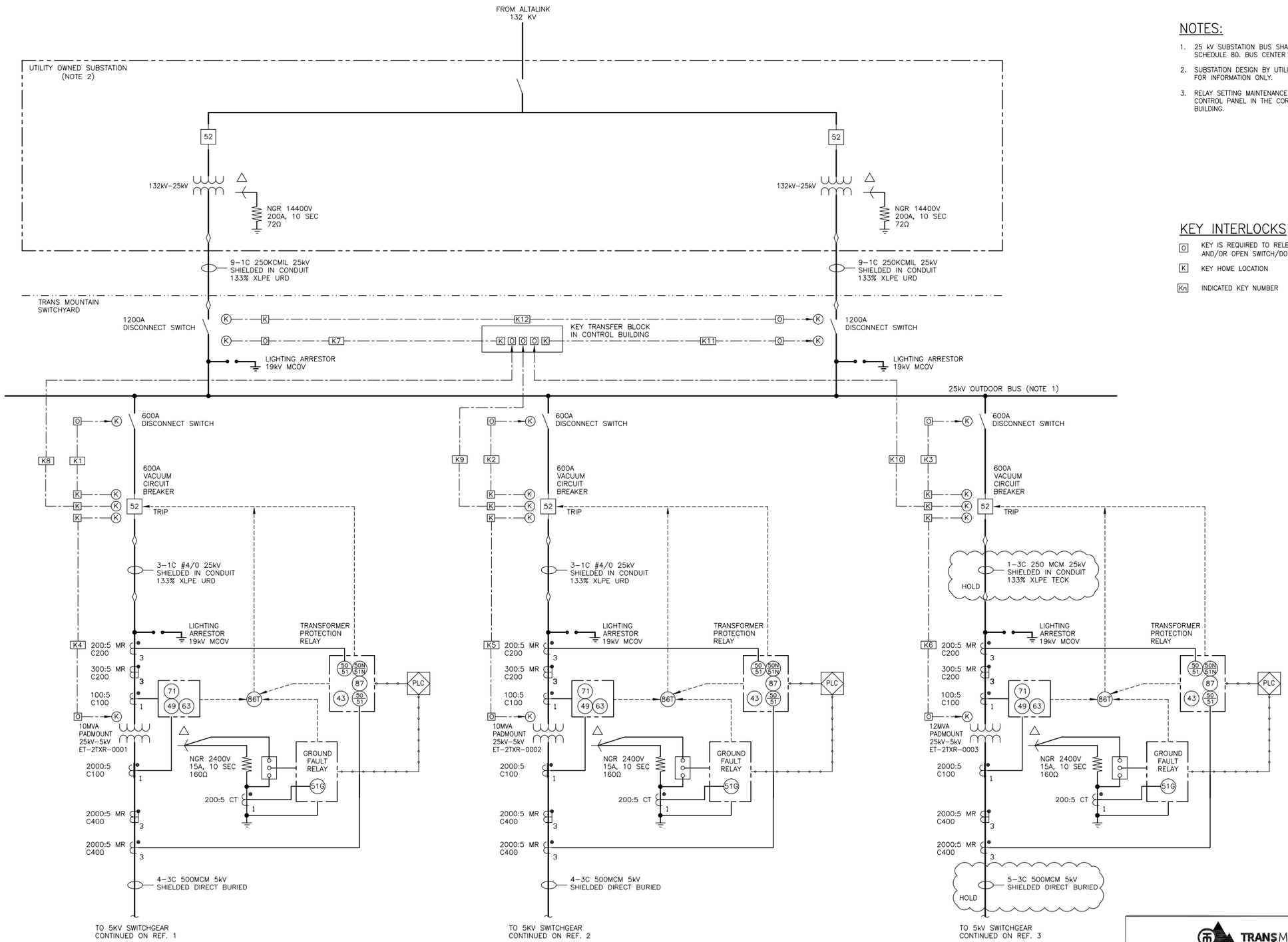

NOTES:

1. 25 kV SUBSTATION BUS SHALL BE 4" ALUMINUM SCHEDULE 80. BUS CENTER PHASE INSULATED.
2. SUBSTATION DESIGN BY UTILITY. EQUIPMENT SHOWN IS FOR INFORMATION ONLY.
3. RELAY SETTING MAINTENANCE SWITCH LOCATED AT A CONTROL PANEL IN THE CORRESPONDING THE ELECTRICAL BUILDING.

KEY INTERLOCKS

O	KEY IS REQUIRED TO RELEASE CAPTURED KEYS AND/OR OPEN SWITCH/DOOR
K	KEY HOME LOCATION
Kn	INDICATED KEY NUMBER

NO.	REFERENCE DRAWING TITLE	REFERENCE DRAWING NO.	NO	DATE	REVISION	DRN	CHK	APPR
HOLD								
3	SINGLE LINE DIAGRAM MEDIUM VOLTAGE SYSTEM TERMINALS	–						
2	SINGLE LINE DIAGRAM MEDIUM VOLTAGE SYSTEM LINE 2	ET02–EE01050 SHT. 02	B	16/09/29	ISSUED FOR INFORMATION, AFE 01–13283	DWM	TM	KS
1	SINGLE LINE DIAGRAM MEDIUM VOLTAGE SYSTEM LINE 2	ET02–EE01050 SHT. 01	A	16/05/06	ISSUED FOR INFORMATION, AFE 01–13283	DWM	TM	KS

TRANS MOUNTAIN

DRAWN BY D. MAH	ELECTRICAL SINGLE LINE DIAGRAM SUBSTATION AND MEDIUM VOLTAGE SYSTEM EDMONTON TERMINAL	SHEET SIZE A1
CHECKED BY T. MA		SCALE NTS
APPROVED BY K. SAVAGE		DATE 15/05/05

PROJECT CODING	DRAWING NUMBER			
AFE	FACILITY ID	DOCUMENT NO	SHT NO	REV
01–13283	ET00	EE01039	01	B

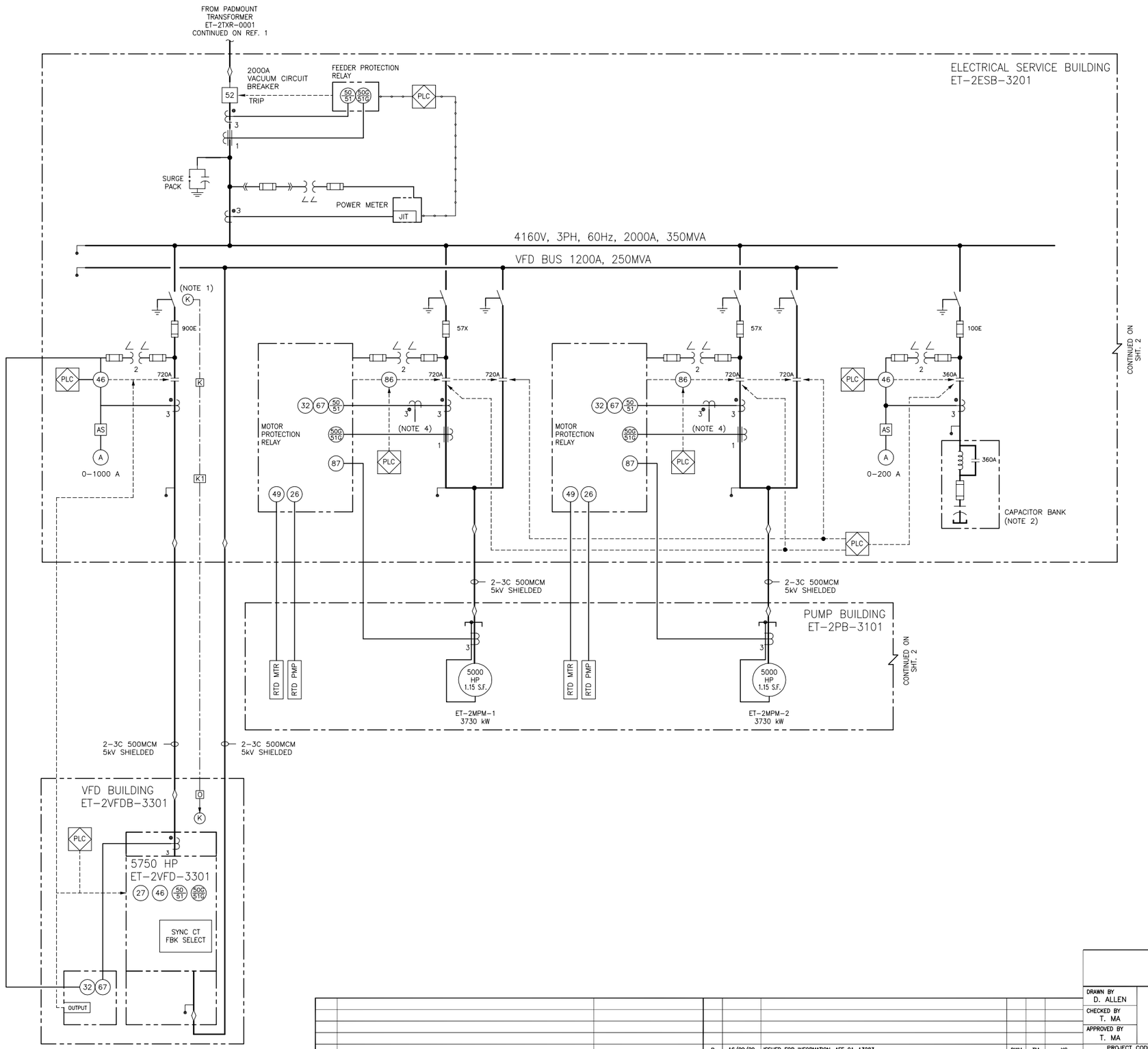

NOTES:

1. MOTOR CONTACTOR SWITCH INTERLOCKED WITH VFD KIRK KEY PULLBOX FOR VFD PANEL ACCESS.
2. CAPACITOR BANK FOR POWER FACTOR CORRECTION FOR EACH MOTOR NOT RUNNING OFF OF VFD. POWER FACTOR CORRECTED TO 90%.
3. CT AND PT SHORTING BLOCK AND TEST BLOCK NOT SHOWN FOR CLARITY.
4. CTS USED FOR SYNC CT FEEDBACK SELECT FOR ET-2VFD-3301.

NO.	REFERENCE DRAWING TITLE	REFERENCE DRAWING NO.	NO	DATE	REVISION	DRN	CHK	APPR
			B	16/09/29	ISSUED FOR INFORMATION, AFE 01-13283	DWM	TM	KS
1	ELECTRICAL SINGLE LINE DIAGRAM SUBSTATION & MEDIUM VOLTAGE SYSTEM	ET00-EE01039 SHT. 01	A	16/04/01	ISSUED FOR INFORMATION, AFE 01-13283	DWM	TM	KS

TRANSMOUNTAIN

DRAWN BY D. ALLEN	ELECTRICAL SINGLE LINE DIAGRAM MEDIUM VOLTAGE SYSTEM LINE 2 EDMONTON TERMINAL	SHEET SIZE A1
CHECKED BY T. MA		SCALE NTS
APPROVED BY T. MA		DATE 12/10/05

PROJECT CODING	DRAWING NUMBER			
AFE	FACILITY ID	DOCUMENT NO	SHT NO	REV
01-13283	ET02	EE01050	01	B

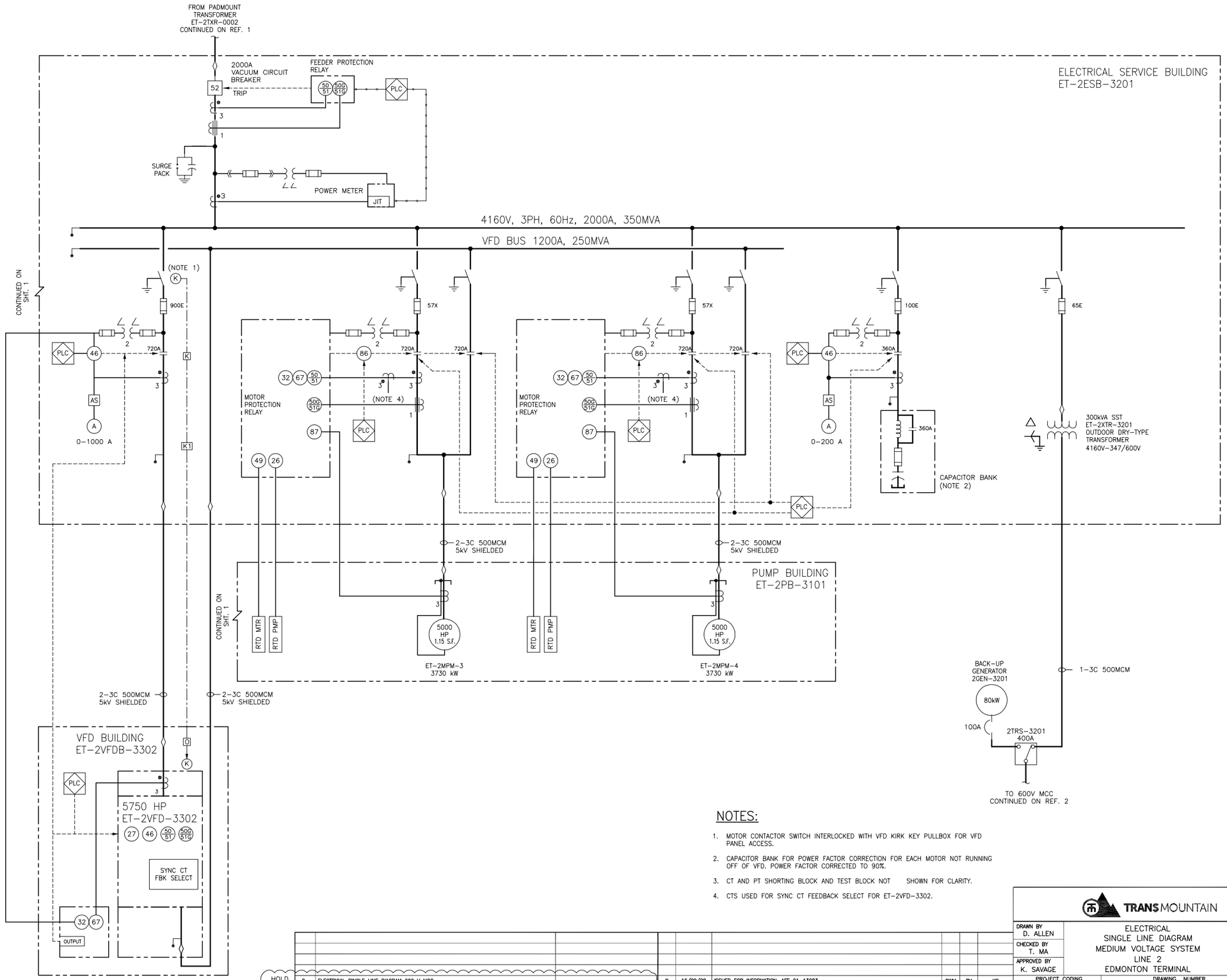

NOTES:

1. MOTOR CONTACTOR SWITCH INTERLOCKED WITH VFD KIRK KEY PULLBOX FOR VFD PANEL ACCESS.
2. CAPACITOR BANK FOR POWER FACTOR CORRECTION FOR EACH MOTOR NOT RUNNING OFF OF VFD. POWER FACTOR CORRECTED TO 90%.
3. CT AND PT SHORTING BLOCK AND TEST BLOCK NOT SHOWN FOR CLARITY.
4. CTS USED FOR SYNC CT FEEDBACK SELECT FOR ET-2VFD-3302.

NO.	REFERENCE DRAWING TITLE	REFERENCE DRAWING NO.	NO	DATE	REVISION	DRN	CHK	APPR
HOLD 2	ELECTRICAL SINGLE LINE DIAGRAM 600 V MCC	-	B	16/09/29	ISSUED FOR INFORMATION, AFE 01-13283	DWM	TM	KS
1	ELECTRICAL SINGLE LINE DIAGRAM SUBSTATION & MEDIUM VOLTAGE SYSTEM	ET00-EE01039 SHT. 01	A	16/04/01	ISSUED FOR INFORMATION, AFE 01-13283	DWM	TM	KS

TRANSMOUNTAIN

DRAWN BY D. ALLEN	ELECTRICAL SINGLE LINE DIAGRAM MEDIUM VOLTAGE SYSTEM LINE 2 EDMONTON TERMINAL	SHEET SIZE A1
CHECKED BY T. MA		SCALE NTS
APPROVED BY K. SAVAGE		DATE 12/10/05

PROJECT CODING	DRAWING NUMBER			
AFE	FACILITY ID	DOCUMENT NO	SHT NO	REV
01-13283	ET02	EE01050	02	B

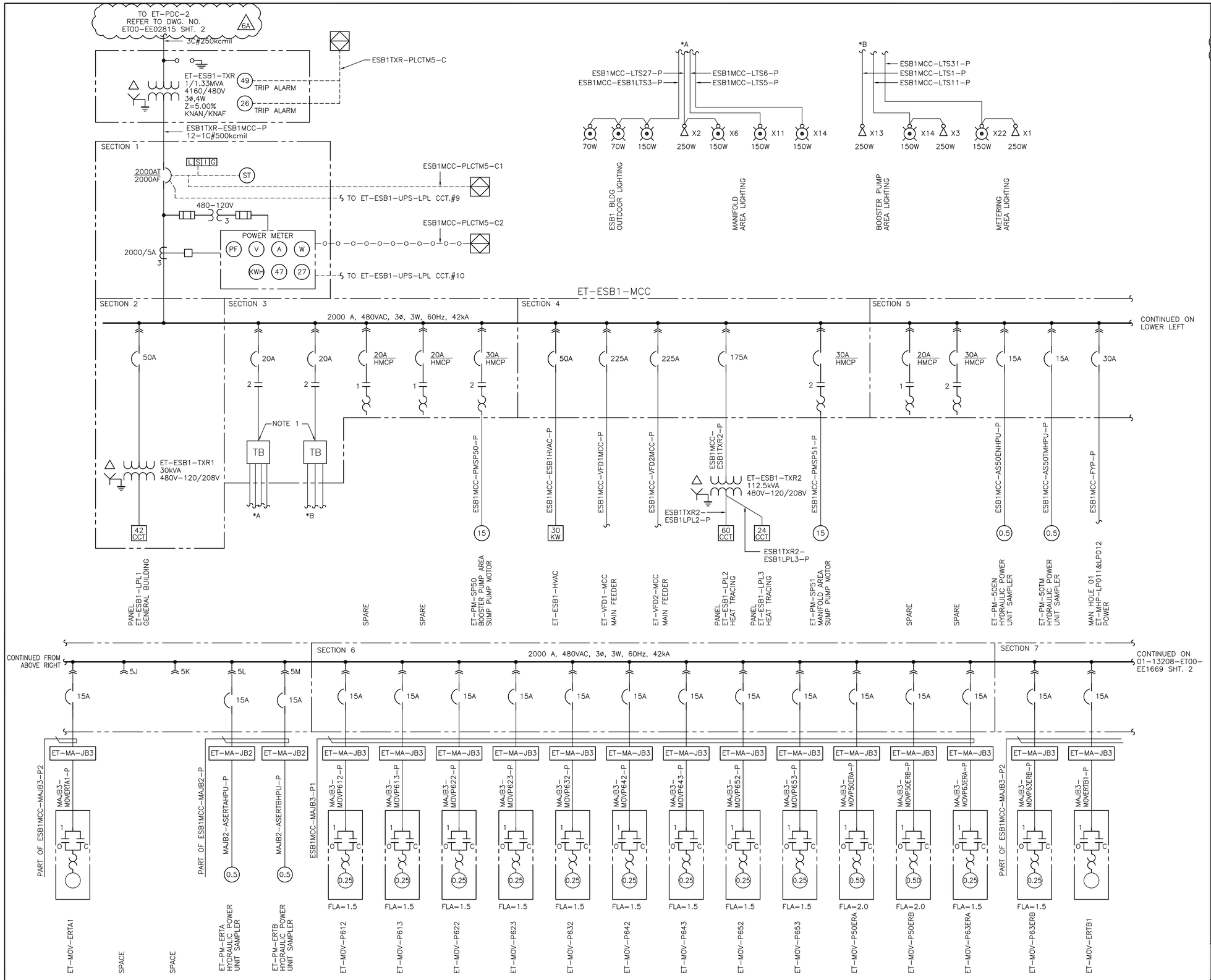

NOTES:

1. LIGHTING TERMINAL BOX MOUNTED IN MCC DIRECTLY BELOW LIGHTING CONTACTOR.
2. 6A – WEST TANK AREA NEW SCOPE

LEGEND:

- PLC I/O INTERFACE
- 26 – HIGH OIL TEMPERATURE
- 27 – UNDERVOLTAGE RELAY
- 49 – WINDING TEMPERATURE ALARM
- 47 – PHASE SEQUENCE RELAY
- V – VOLTAGE
- A – AMPERES
- W – WATT
- ST – SHUNT TRIP
- PF – POWER FACTOR
- KWH – KILOWATT HOUR
- TEST SWITCH
- PQM – POWER QUALITY METER
- S/N – SOLID NEUTRAL
- CURRENT TRANSFORMER
- POTENTIAL TRANSFORMER
- SURGE ARRESTORS
- LSIG – LONG SHORT INSTANTANEOUS GROUND
- SOFTLINK
- HARDWIRE

ISSUED FOR REVIEW

FOR INFO ONLY

TYTEC

KINDER MORGAN CANADA

TRANS MOUNTAIN

DRAWN BY	SINGLE LINE DIAGRAM ET-ESB1-MCC (480V)	SHEET SIZE
N. CABRERA		A1
CHECKED BY S. ALLAUDDIN		SCALE NTS
APPROVED BY P. AQUINO-MEZA	EDMONTON TERMINAL	DATE 11/07/07

AFE	WBS	FACILITY ID	DOCUMENT NO	SHT NO	REV
01-13283		ET00	EE1669	01	6A

DRAWING NUMBER

NO	REFERENCE DRAWINGS	DRAWING NO
5	CABLE AND CONDUIT SCHEDULE ET-VFD2 BUILDING BOOSTER PUMP & METERING AREA	EE217505/EE217506
4	CABLE AND CONDUIT SCHEDULE BOOSTER PUMP & METERING AREA	EE175404
3	SINGLE LINE DIAGRAM ET-VFD1-MCC (480V)	EE167401
2	SINGLE LINE DIAGRAM ET-ESB1-MCC (480V)	EE166902
1	EQUIPMENT LAYOUT MCC ELEVATION ET-ESB1-MCC	EE168901

NO	DATE	REVISION	DRN	CHK	APPR
6A	16/12/15	ISSUED FOR DBM – AFE# 01-13283	NZ	AA	PG

NO	DATE	REVISION	DRN	CHK	APPR
5	15/03/20	AS-BUILT, AFE# 01-13627	NB	TN	
4	14/07/04	AS-BUILT, AFE# 01-13208, ISSUED FOR CONSTRUCTION, AFE# 01-13627, ADDENDUM 1	NC	SA	BP
3	14/03/14	ISSUED FOR CONSTRUCTION, AFE# 01-13627 TANKS OUTBOUND CONNECTION	NC	SA	BP
2	13/03/19	ISSUED FOR CONSTRUCTION, AFE# 01-13208 ETE EXPANSION, ADDENDUM 3	NC	SA	PAM
1	13/02/07	ISSUED FOR CONSTRUCTION, AFE# 01-13208 ETE EXPANSION, ADDENDUM 1	NC	SA	PAM
0	12/12/06	ISSUED FOR CONSTRUCTION, AFE# 01-13208 ETE EXPANSION	NC	SA	PAM

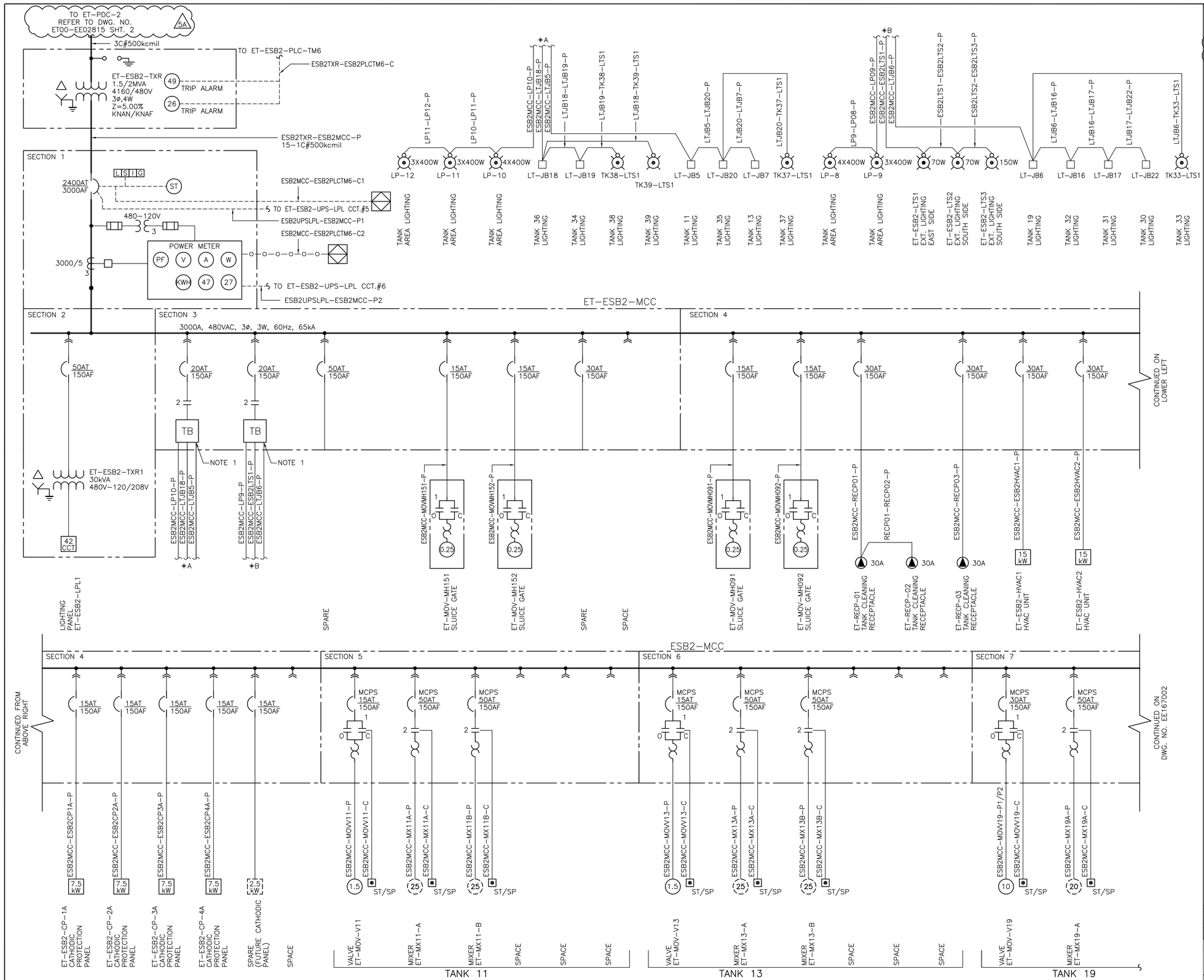

NOTES:

1. LIGHTING TERMINAL BOX MOUNTED IN MCC DIRECTLY BELOW LIGHTING CONTACTOR.
2. – WEST TANK AREA NEW SCOPE 5A

LEGEND:

- PLC I/O INTERFACE
- 26 – HIGH OIL TEMPERATURE
- 27 – UNDERVOLTAGE RELAY
- 49 – WINDING TEMPERATURE ALARM
- 47 – PHASE SEQUENCE RELAY
- V – VOLTAGE
- A – AMPERES
- W – WATT
- ST – SHUNT TRIP
- PF – POWER FACTOR
- KWH – KILOWATT HOUR
- TEST SWITCH
- PQM – POWER QUALITY METER
- S/N – SOLID NEUTRAL
- CURRENT TRANSFORMER
- POTENTIAL TRANSFORMER
- SURGE ARRESTORS
- LSIG – LONG SHORT INSTANTANEOUS GROUND
- SOFTLINK
- HARDWIRE

ISSUED FOR REVIEW

FOR INFO ONLY

TYTEC

NO	REFERENCE DRAWINGS	DRAWING NO
7	CABLE & CONDUIT SCHEDULE TANK ET-ESB2 (INTERNAL) EAST TANK FARM AREA (NORTH)	EE174202

KINDER MORGAN CANADA — TRANS MOUNTAIN

DRAWN BY N. CABRERA
CHECKED BY J. NATH
APPROVED BY P. AQUINO-MEZA

SINGLE LINE DIAGRAM
ET-ESB2-MCC (480V)
EAST TANK FARM AREA(NORTH)
EDMONTON TERMINAL

SHEET SIZE A1
SCALE NTS
DATE 11/12/17

DRAWING NUMBER

AFE	WBS	FACILITY ID	DOCUMENT NO	SHT NO	REV
01-13283	—	ET00	EE1670	01	5A

NO	REFERENCE DRAWINGS	DRAWING NO	NO	DATE	REVISION	DRN	CHK	APPR	NO	DATE	REVISION	DRN	CHK	APPR
6	CABLE & CONDUIT SCHEDULE TANK ET-ESB2 (INTERNAL) EAST TANK FARM AREA (NORTH)	EE174201							5A	16/12/15	ISSUED FOR DBM – AFE# 01-13283	NZ	AA	PG
5	CABLE & CONDUIT SCHEDULE TANK ET-TNK-19 EAST TANK FARM AREA (NORTH)	EE1723							4	15/03/20	AS-BUILT, AFE# 01-13419 / 01-13626	NB	TN	
4	CABLE & CONDUIT SCHEDULE TANK ET-TNK-13 EAST TANK FARM AREA (NORTH)	EE1722							3	14/07/31	AS-BUILT, AFE# 01-13208	FT	NC	
3	CABLE & CONDUIT SCHEDULE TANK ET-TNK-11 EAST TANK FARM AREA (NORTH)	EE1721							2	14/02/24	ISSUED FOR CONSTRUCTION, AFE# 01-13626 TANKS 29 & 30	TN	SA	BP
2	SINGLE LINE DIAGRAM ET-ESB2-MCC(480V) EAST TANK FARM AREA(NORTH)	EE167002							1	13/04/19	ISSUED FOR CONSTRUCTION, AFE# 01-13208 / 01-13419 ETE EXPANSION, ADDENDUM 1	FT	SA	PAM
1	EQUIPMENT LAYOUT MCC ELEVATION ET-ESB2-MCC	EE169401							0	13/02/13	ISSUED FOR CONSTRUCTION, AFE# 01-13208 ETE EXPANSION	NC	JN	PAM

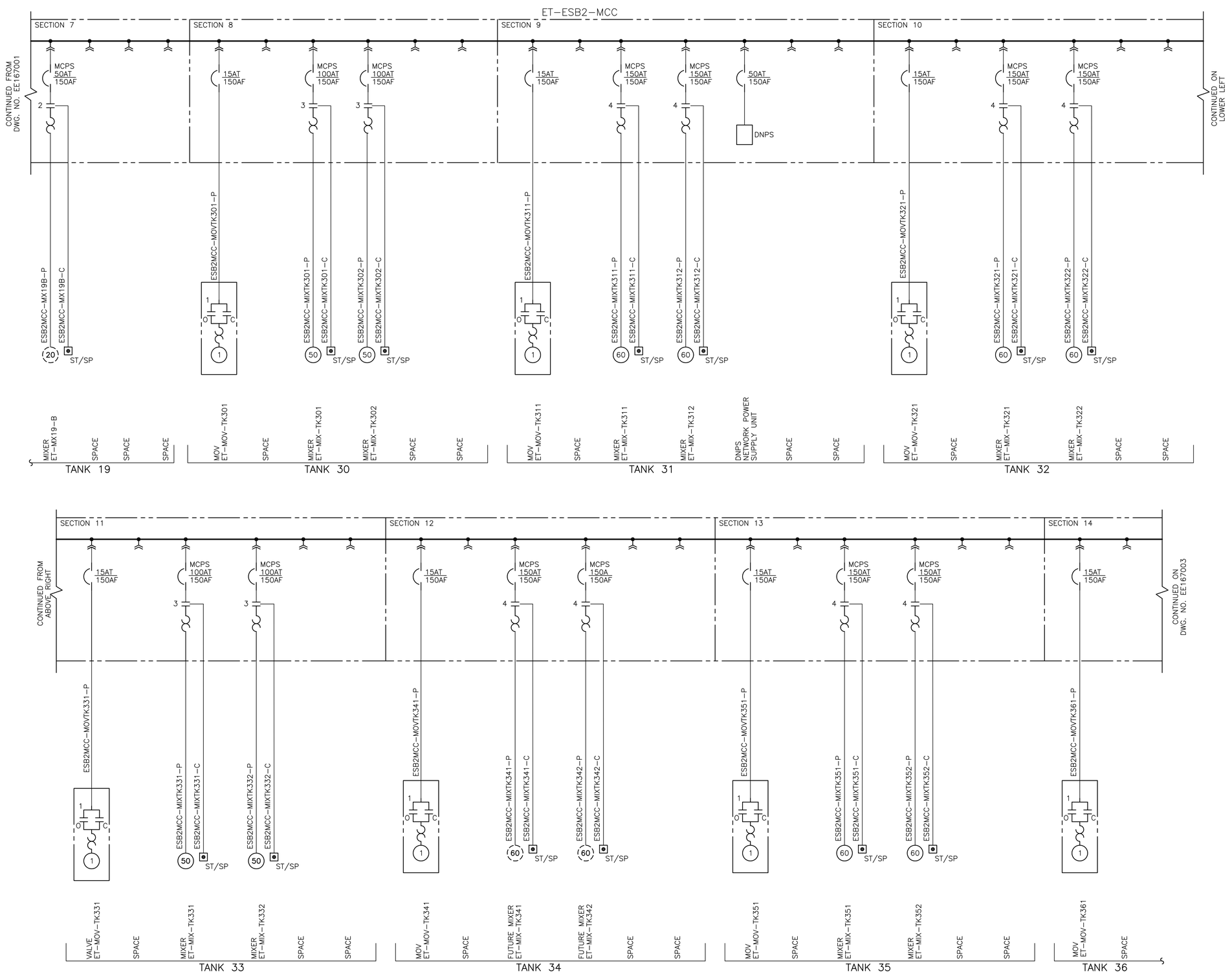

LEGEND:

– MOTOR OVERLOADS

– INTEGRAL STARTER

NO	REFERENCE DRAWINGS	DRAWING NO
11	CABLE & CONDUIT SCHEDULE TANK ET–TNK–TK33 EAST TANK FARM AREA (NORTH)	EE1714
10	CABLE & CONDUIT SCHEDULE TANK ET–TNK–TK36 EAST TANK FARM AREA (NORTH)	EE172801
9	CABLE & CONDUIT SCHEDULE TANK ET–TNK–TK35 EAST TANK FARM AREA (NORTH)	EE172701
8	CABLE & CONDUIT SCHEDULE TANK ET–TNK–TK34 EAST TANK FARM AREA (NORTH)	EE172601
7	CABLE & CONDUIT SCHEDULE TANK ET–TNK–TK32 EAST TANK FARM AREA (NORTH)	EE172501
6	CABLE & CONDUIT SCHEDULE TANK ET–TNK–TK31 EAST TANK FARM AREA (NORTH)	EE172401
5	CABLE & CONDUIT SCHEDULE TANK ET–TNK–TK19 EAST TANK FARM AREA (NORTH)	EE172301
4	SINGLE LINE DIAGRAM ET–ESB2–MCC(480V) EAST TANK FARM AREA(NORTH)	EE167003
3	SINGLE LINE DIAGRAM ET–ESB2–MCC(480V) EAST TANK FARM AREA(NORTH)	EE167001
2	EQUIPMENT LAYOUT MCC ELEVATION ET–ESB2–MCC	EE169402
1	EQUIPMENT LAYOUT MCC ELEVATION ET–ESB2–MCC	EE169401

NO	DATE	REVISION	DRN	CHK	APPR
4	15/03/20	AS–BUILT, AFE# 01–13419 / 01–13626	NB	TN	
3	14/07/31	AS–BUILT, AFE# 01–13208	FT	NC	
2	14/02/24	ISSUED FOR CONSTRUCTION, AFE# 01–13626 TANKS 29 & 30	TN	SA	BP
1	13/04/19	ISSUED FOR CONSTRUCTION, AFE# 01–13208 / 01–13419 ETE EXPANSION, ADDENDUM 1	FT	SA	PAM
0	13/02/13	ISSUED FOR CONSTRUCTION, AFE# 01–13208 ETE EXPANSION	NC	JN	PAM

WorleyParsons resources & energy

OneWay to zero harm

"This drawing is prepared solely for the use of the contractual customer of WorleyParsons Canada Services Ltd. and WorleyParsons Canada Services Ltd. assumes no liability to any other party for any representations contained in this drawing."

KINDER MORGAN CANADA

TRANS MOUNTAIN

DRAWN BY N. CABRERA
CHECKED BY J. NATH
APPROVED BY P. AQUINO–MEZA

SINGLE LINE DIAGRAM
ET–ESB2–MCC (480V)
EAST TANK FARM AREA(NORTH)

EDMONTON TERMINAL

SHEET SIZE A1
SCALE NTS
DATE 11/12/17

DRAWING NUMBER

AFE	WBS	FACILITY ID	DOCUMENT NO	SHT NO	REV
01–13208		ET00	EE1670	02	4

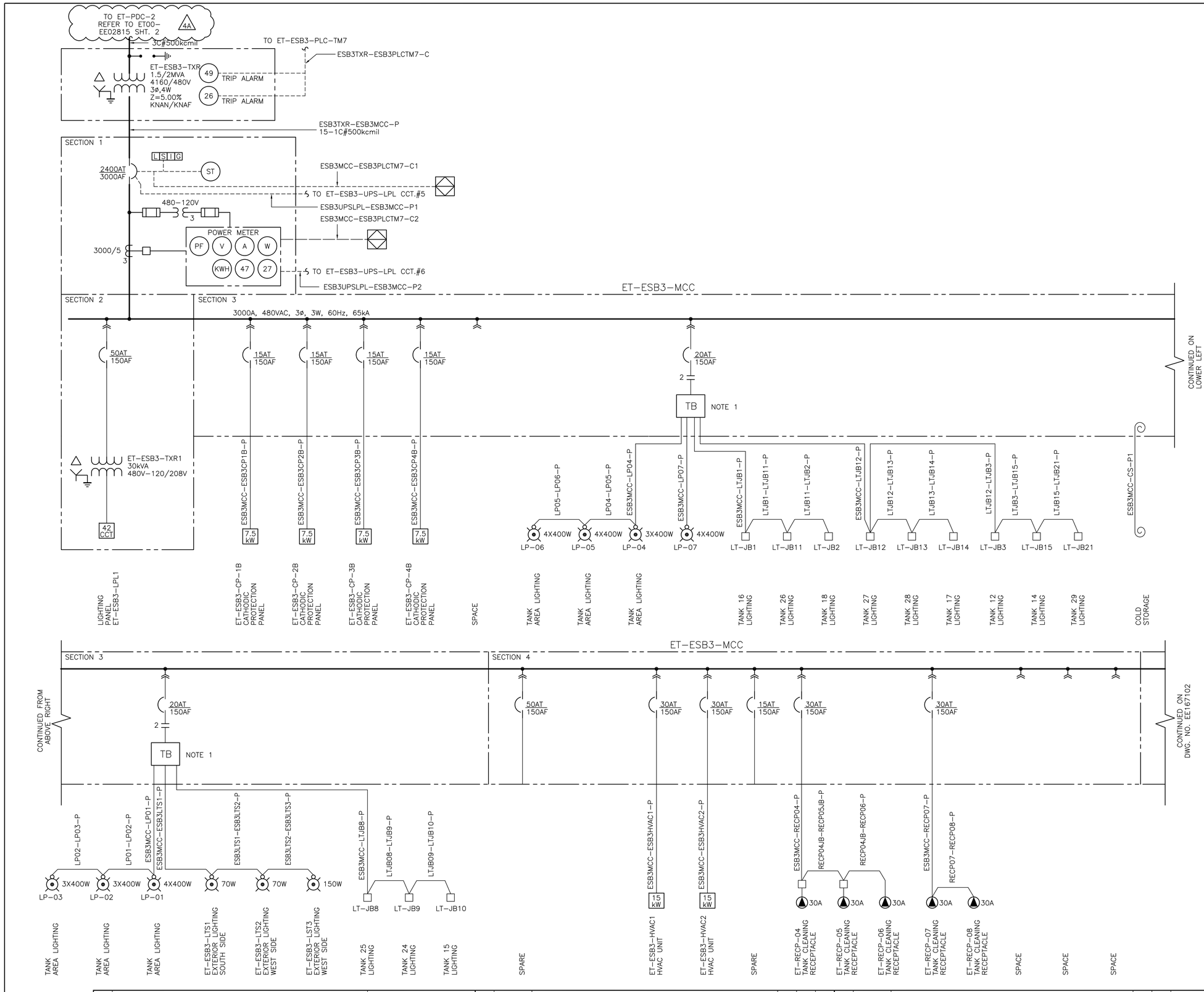

NOTES:

1. LIGHTING TERMINAL BOX MOUNTED IN MCC DIRECTLY BELOW LIGHTING CONTACTOR.
2. – WEST TANK AREA NEW SCOPE (4A)

LEGEND:

- PLC I/O INTERFACE
- 26 – HIGH OIL TEMPERATURE
- 27 – UNDERVOLTAGE RELAY
- 49 – WINDING TEMPERATURE ALARM
- 47 – PHASE SEQUENCE RELAY
- V – VOLTAGE
- A – AMPERES
- W – WATT
- ST – SHUNT TRIP
- PF – POWER FACTOR
- KWH – KILOWATT HOUR
- TEST SWITCH
- PQM – POWER QUALITY METER
- S/N – SOLID NEUTRAL
- CURRENT TRANSFORMER
- POTENTIAL TRANSFORMER
- SURGE ARRESTORS
- LSIG – LONG SHORT INSTANTANEOUS GROUND
- SOFTLINK
- HARDWIRE

ISSUED FOR REVIEW

FOR INFO ONLY

TYTEC

KINDER MORGAN CANADA

TRANS MOUNTAIN

DRAWN BY D. CAMPBELL	SINGLE LINE DIAGRAM ET-ESB3-MCC (480V) EAST TANK FARM AREA(SOUTH)
CHECKED BY SA	
APPROVED BY PAM	EDMONTON TERMINAL
SHEET SIZE A1	
SCALE NTS	
DATE 11/12/17	

DRAWING NUMBER

AFE	WBS	FACILITY ID	DOCUMENT NO	SHT NO	REV
01-13283		ET00	EE1671	01	4A

NO	REFERENCE DRAWINGS	DRAWING NO
4	CABLE & CONDUIT SCHEDULE TANK ET-ESB3 (INTERNAL) EAST TANK FARM AREA (SOUTH)	EE174302
3	CABLE & CONDUIT SCHEDULE TANK ET-ESB3 (INTERNAL) EAST TANK FARM AREA (SOUTH)	EE174301
2	SINGLE LINE DIAGRAM ET-ESB3-MCC(480V) EAST TANK FARM AREA(SOUTH)	EE167102
1	EQUIPMENT LAYOUT MCC ELEVATION ET-ESB3-MCC	EE169501

NO	DATE	REVISION	DRN	CHK	APPR
4A	16/12/15	ISSUED FOR DBM – AFE# 01-13283	NZ	AA	PG
3	15/03/20	AS-BUILT, AFE# 01-13626	NB	TN	
2	14/07/31	AS-BUILT, AFE# 01-13208	FT	NC	
1	14/02/24	ISSUED FOR CONSTRUCTION, AFE# 01-13626 TANKS 29 & 30	TN	SA	BP
0	13/02/13	ISSUED FOR CONSTRUCTION, AFE# 01-13208 ETE EXPANSION	DC	SA	PAM

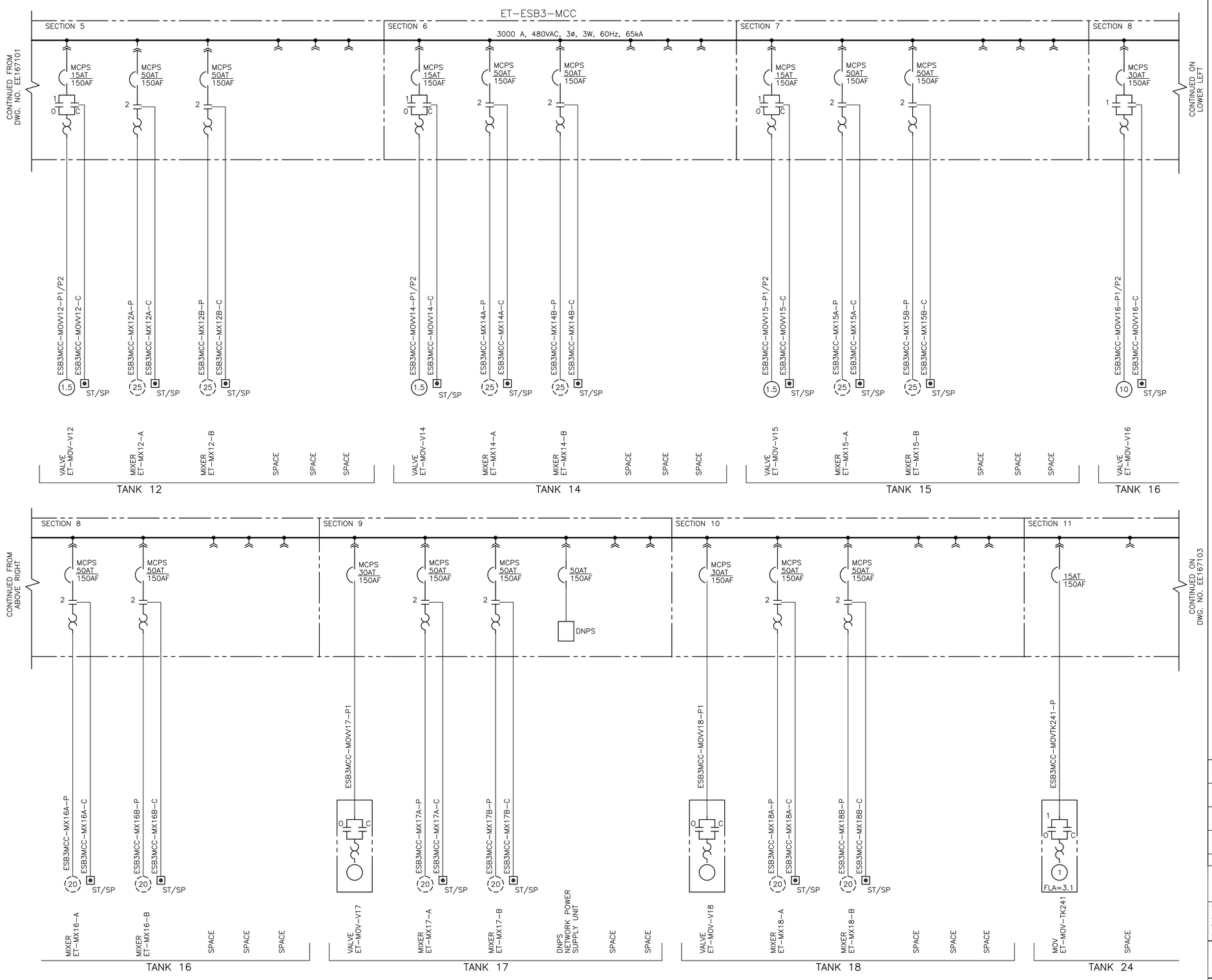

LEGEND:

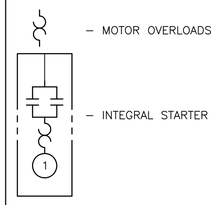

TK 17 & 18
NEED AS-BUILT
BY KMC ENGINEERING

NO	REFERENCE DRAWINGS	DRAWING NO
10	CABLE & CONDUIT SCHEDULE TANK ET-TNK-24 EAST TANK FARM AREA (SOUTH)	EE1735
9	CABLE & CONDUIT SCHEDULE TANK ET-TNK-18 EAST TANK FARM AREA (SOUTH)	EE1734
8	CABLE & CONDUIT SCHEDULE TANK ET-TNK-17 EAST TANK FARM AREA (SOUTH)	EE1733
7	CABLE & CONDUIT SCHEDULE TANK ET-TNK-16 EAST TANK FARM AREA (SOUTH)	EE1732

WorleyParsons resources & energy — OneWay to zero harm

"This drawing is prepared solely for the use of the contractual customer of WorleyParsons Canada Services Ltd. and WorleyParsons Canada Services Ltd. assumes no liability to any other party for any representations contained in this drawing."

KINDER MORGAN CANADA — TRANS MOUNTAIN

DRAWN BY N. CABRERA	SINGLE LINE DIAGRAM ET-ESB3-MCC (480V) EAST TANK FARM AREA(SOUTH)	SHEET SIZE A1	
CHECKED BY SA		SCALE NTS	
APPROVED BY PAM	EDMONTON TERMINAL	DATE 11/12/17	

DRAWING NUMBER					
AFE	WBS	FACILITY ID	DOCUMENT NO	SHT NO	REV
01-13208	—	ET00	EE1671	02	1

NO	REFERENCE DRAWINGS	DRAWING NO	NO	DATE	REVISION	DRN	CHK	APPR	NO	DATE	REVISION	DRN	CHK	APPR
6	CABLE & CONDUIT SCHEDULE TANK ET-TNK-15 EAST TANK FARM AREA (SOUTH)	EE1731												
5	CABLE & CONDUIT SCHEDULE TANK ET-TNK-14 EAST TANK FARM AREA (SOUTH)	EE1730												
4	CABLE & CONDUIT SCHEDULE TANK ET-TNK-12 EAST TANK FARM AREA (SOUTH)	EE1729												
3	SINGLE LINE DIAGRAM ET-ESB3-MCC(480V) EAST TANK FARM AREA(SOUTH)	EE167103												
2	SINGLE LINE DIAGRAM ET-ESB3-MCC(480V) EAST TANK FARM AREA(SOUTH)	EE167101							1	14/07/31	AS-BUILT, AFE# 01-13208	FT	NC	
1	EQUIPMENT LAYOUT MCC ELEVATION ET-ESB3-MCC	EE169501							0	13/02/13	ISSUED FOR CONSTRUCTION, AFE#01-13208 ETE EXPANSION	NC	SA	PAM

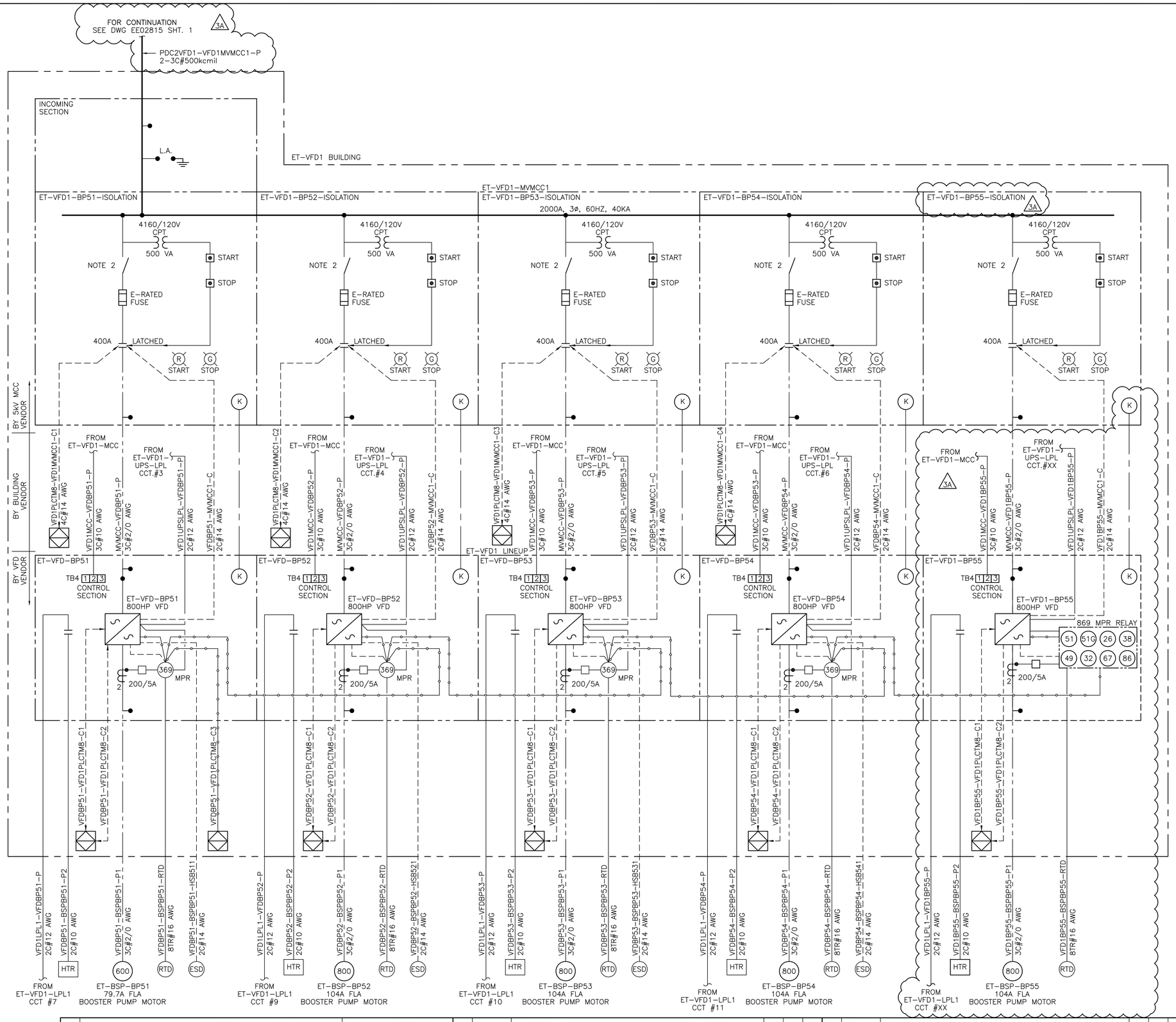

NOTES:

1. KEY INTERLOCK SHALL BE PROVIDED BETWEEN VFD CABINET AND MV MCC FEEDER SECTIONS AS SHOWN ON THE DRAWING.
2. DISCONNECT SWITCH FOR ISOLATION ONLY.
3. – WEST TANK AREA NEW SCOPE 3A

LEGEND:

- PLC I/O INTERFACE
- ESD – EMERGENCY STOP PUSH BUTTON
- K – KIRK KEY INTERLOCK
- MODBUS RS485 COMMUNICATION LINK
- CONTROL SIGNAL CABLE
- FUSE
- DISCONNECT SWITCH
- VACUUM CONTACTOR
- GROUND BALL
- PUSH BUTTON
- CPT CONTROL POWER TRANSFORMER
- CURRENT TRANSFORMER
- FLEXITEST SWITCH
- 369 – MOTOR PROTECTION RELAY
- PILOT LIGHT
  RED = START
  GREEN = STOP

FOR INFO ONLY

TYTEC

KINDER MORGAN CANADA

TRANS MOUNTAIN

5	SINGLE LINE DIAGRAM PDC-X2 (4160V)	EE02815 SHT. 1													
4	DISTRIBUTION PANEL SCHEDULE ET-VFD1 DIST. PANELS	EE170301							3A	16/12/15	ISSUED FOR DBM – AFE# 01-13283	NZ	AA	PG
3	CABLE & CONDUIT SCHEDULE ET-VFD1 BUILDING	EE175602							2	14/06/30	AS-BUILT, AFE# 01-13208	FT	NC	
2	CABLE & CONDUIT SCHEDULE ET-VFD1 BUILDING	EE175601							1	13/05/24	ISSUED FOR CONSTRUCTION, AFE# 01-13208 ETE EXPANSION, ADDENDUM 4	NC	SA	PAM
1	SINGLE LINE DIAGRAM ET-SWGR (4160V)	EE167202							0	12/12/06	ISSUED FOR CONSTRUCTION, AFE# 01-13208 ETE EXPANSION	NC	SA	PAM
NO	REFERENCE DRAWINGS	DRAWING NO	NO	DATE	REVISION	DRN	CHK	APPR	NO	DATE	REVISION	DRN	CHK	APPR

DRAWN BY	N. CABRERA
CHECKED BY	S. ALLAUDIN
APPROVED BY	P. AQUINO-MEZA

SINGLE LINE DIAGRAM
ET-VFD1 BLDG (4160V)

EDMONTON TERMINAL

SHEET SIZE	SCALE	DATE
A1	NTS	12/02/09

DRAWING NUMBER

AFE	WBS	FACILITY ID	DOCUMENT NO	SHT NO	REV
01-13283		ET00	EE1673	01	3A

LEGEND:

– DENOTES WEST TANK AREA NEW SCOPE 2A

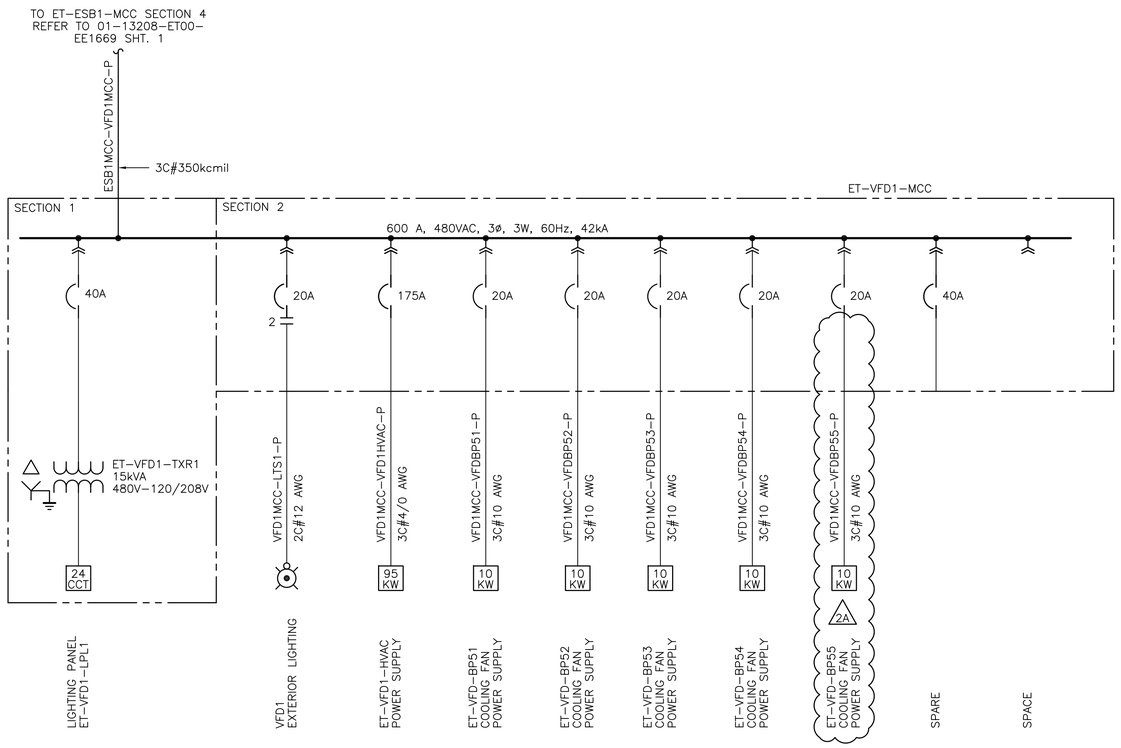

ISSUED FOR REVIEW

FOR INFO ONLY

TYTEC

KINDER MORGAN CANADA

TRANS MOUNTAIN

DRAWN BY D.GU	SINGLE LINE DIAGRAM ET–VFD1–MCC (480V)	SHEET SIZE A1
CHECKED BY S. ALLAUDIN		SCALE NTS
APPROVED BY P. AQUINO–MEZA	EDMONTON TERMINAL	DATE 12/09/05

DRAWING NUMBER					
AFE	WBS	FACILITY ID	DOCUMENT NO	SHT NO	REV
01–13283		ET00	EE1674	01	2A

NO	REFERENCE DRAWINGS	DRAWING NO
1	SINGLE LINE DIAGRAM ET–ESB1–MCC (480V)	EE1669 SHT. 1

NO	DATE	REVISION	DRN	CHK	APPR

NO	DATE	REVISION	DRN	CHK	APPR
2A	16/12/15	ISSUED FOR DBM – AFE# 01–13283	NZ	AA	PG
1	14/06/30	AS–BUILT, AFE#01–13208	FT	NC	
0	13/05/24	ISSUED FOR CONSTRUCTION, AFE#01–13208 ETE EXPANSION ADDENDUM 4	NC	SA	PAM

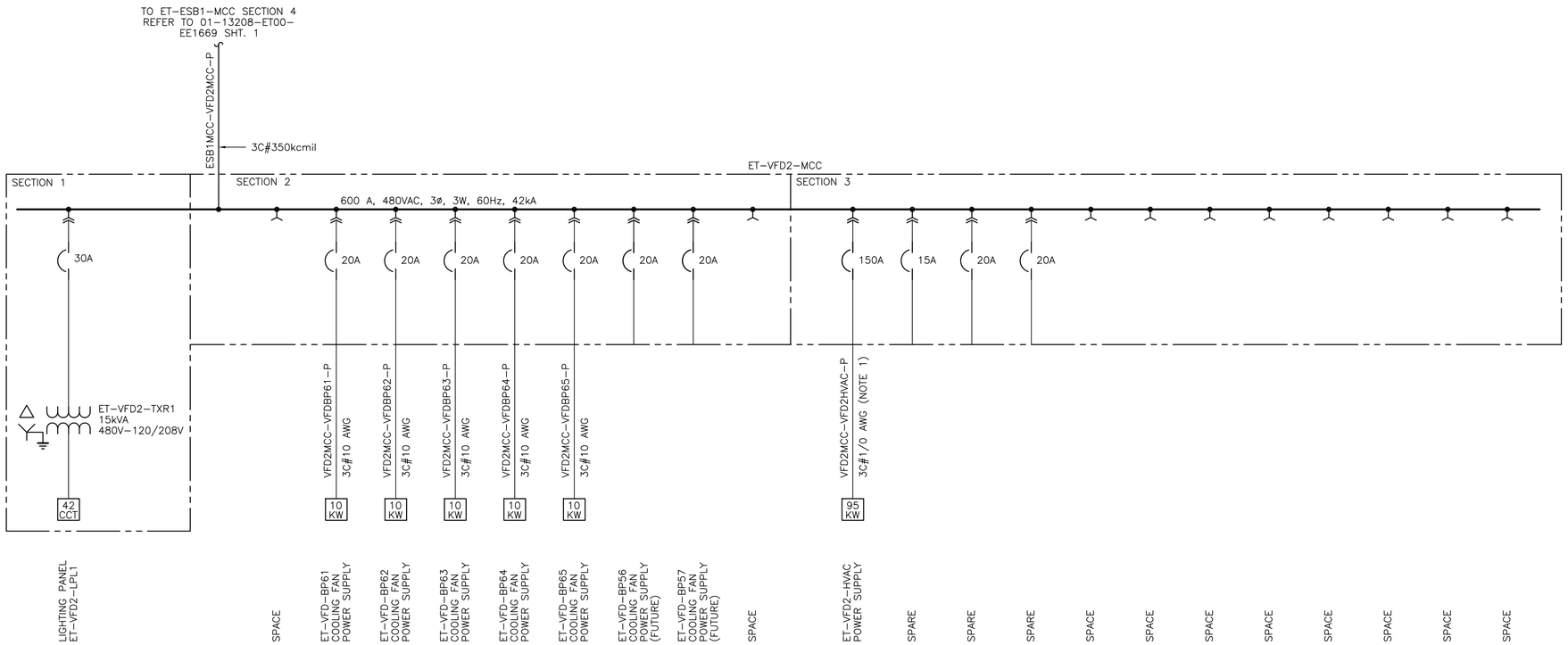

NO	REFERENCE DRAWINGS	DRAWING NO
2	DISTRIBUTION PANEL SCHEDULE ET-VFD2 DIST. PANELS	EE2173
1	SINGLE LINE DIAGRAM ET-ESB1-MCC (480V)	EE1669 SHT. 1

NO	DATE	REVISION	DRN	CHK	APPR
1	15/03/20	AS-BUILT, AFE# 01-13627	NB	TN	
0	14/03/14	ISSUED FOR CONSTRUCTION, AFE#01-13627 TANKS OUTBOUND CONNECTION	NC	SA	BP

WorleyParsons
resources & energy

OneWay
to zero harm

"This drawing is prepared solely for the use of the contractual customer of WorleyParsons Canada Services Ltd. and WorleyParsons Canada Services Ltd. assumes no liability to any other party for any representations contained in this drawing."

KINDER MORGAN CANADA

TRANS MOUNTAIN

DRAWN BY N. CABRERA	SINGLE LINE DIAGRAM ET-VFD2-MCC (480V)	SHEET SIZE A1
CHECKED BY S. ALLAUDDIN		SCALE NTS
APPROVED BY B. PARIHAR	EDMONTON TERMINAL	DATE 13/06/12

DRAWING NUMBER					
AFE	WBS	FACILITY ID	DOCUMENT NO	SHT NO	REV
01-13627	—	ET00	EE2161		1

NOTES:

1. REFER TO KM-EE0010 ELECTRICAL STANDARD SYMBOL SHEET.

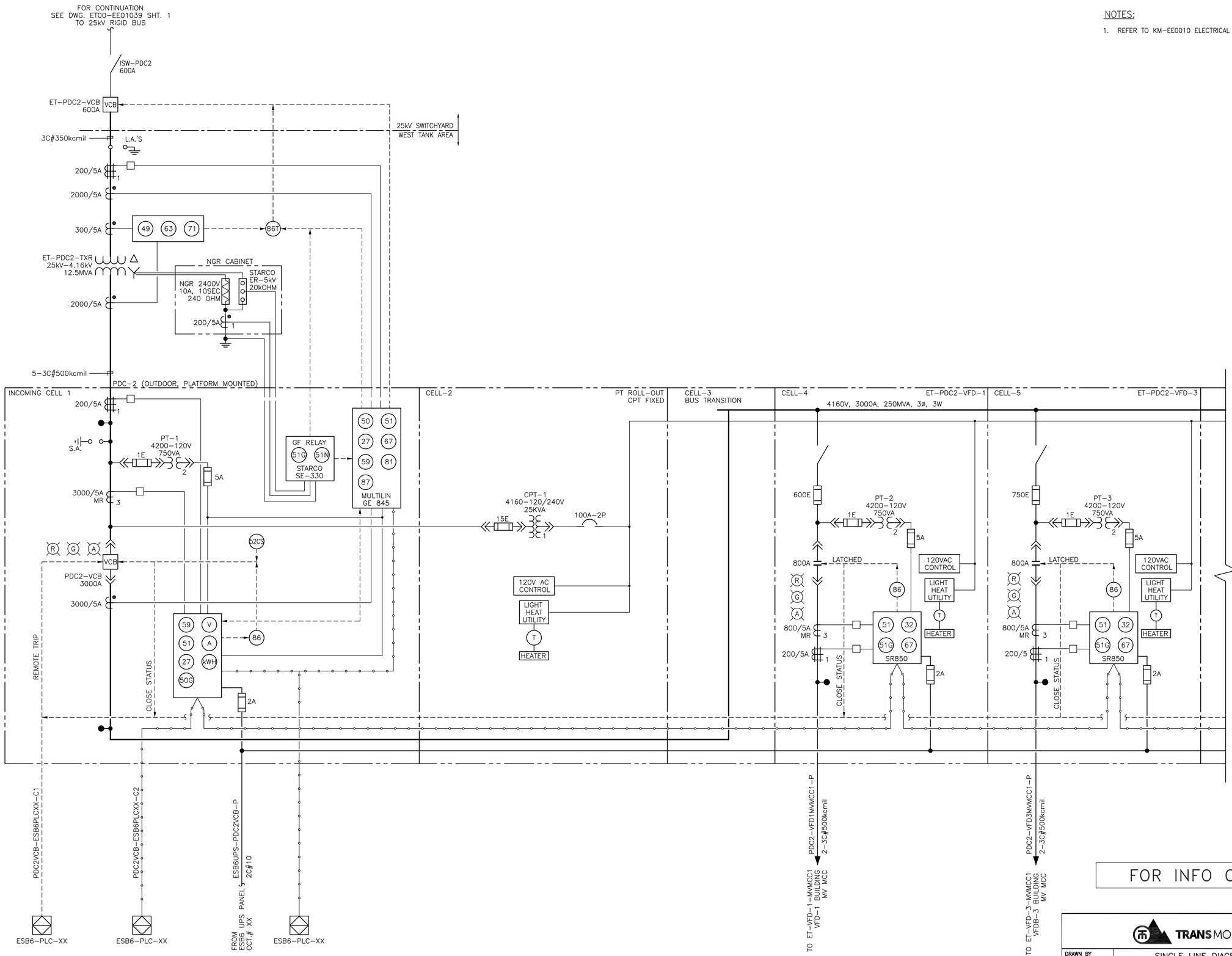

FOR INFO ONLY

TYTEC

TRANS MOUNTAIN

2	SINGLE LINE DIAGRAM – PDC-2 WEST TANK AREA	EE02815 SHT. 2						
1	SINGLE LINE DIAGRAM-SUBSTATION AND MEDIUM VOLTAGE SYSTEM	EE01039 SHT. 1	A	2016/12/15	ISSUED FOR DBM – AFE# 01-13283	NZ	AA	PG
NO.	REFERENCE DRAWING TITLE	REFERENCE DRAWING NO.	NO	DATE	REVISION	DRN	CHK	APPR

DRAWN BY N. ZENARI	SINGLE LINE DIAGRAM ET-PDC-2 WEST TANK AREA	SHEET SIZE A1
CHECKED BY A. ARAJI		SCALE NTS
APPROVED BY P. GIVENS	EDMONTON TERMINAL	DATE 16/08/04

PROJECT CODING	DRAWING NUMBER			
AFE	FACILITY ID	DOCUMENT NO	SHT NO	REV
01-13283	ET00	EE02815	01	A

NOTES:

1. REFER TO KM-EE0010 ELECTRICAL STANDARD SYMBOL SHEET.

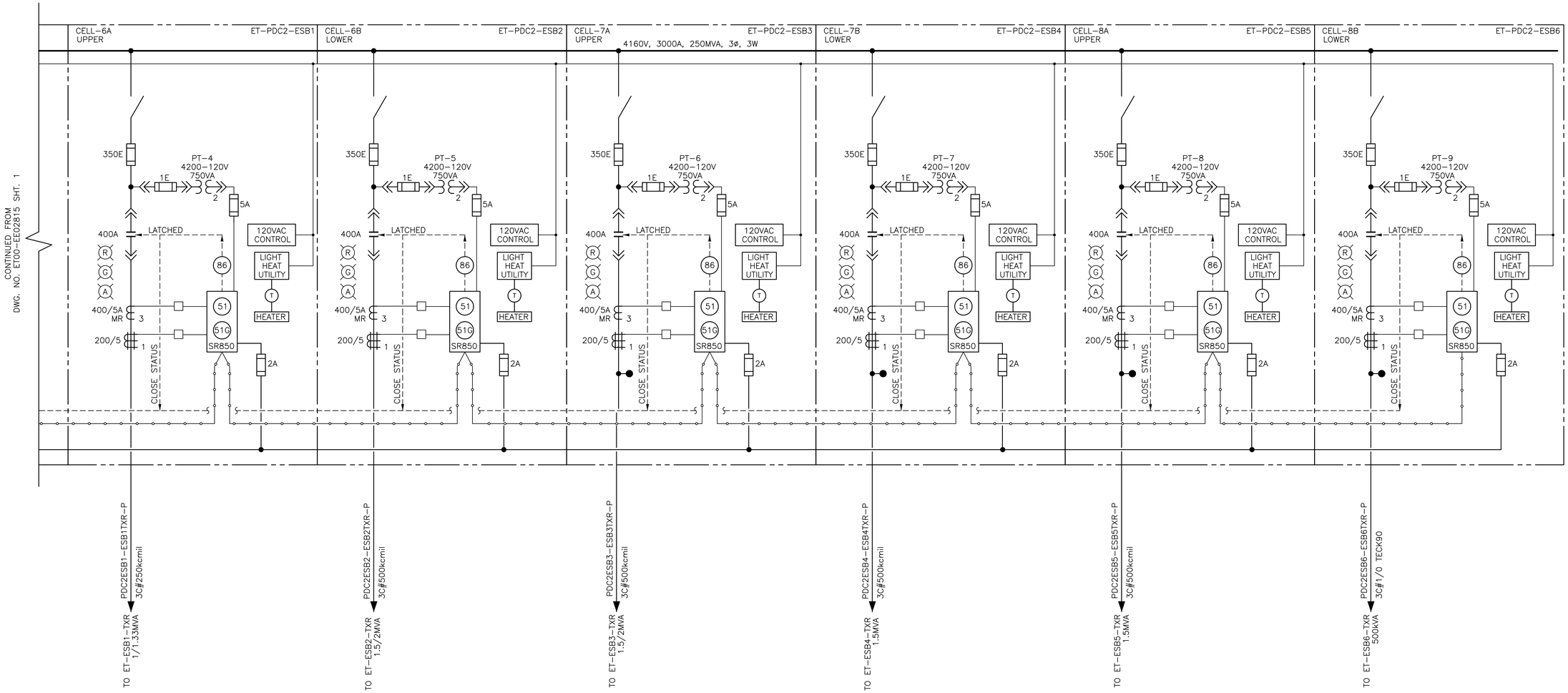

FOR INFO ONLY

NO.	REFERENCE DRAWING TITLE	REFERENCE DRAWING NO.	NO	DATE	REVISION	DRN	CHK	APPR
1	SINGLE LINE DIAGRAM – PDC-2 WEST TANK AREA	EE02815 SHT. 1	A	2016/12/15	ISSUED FOR DBM – AFE# 01-13283	NZ	AA	PG

TYTEC

TRANS MOUNTAIN

DRAWN BY N. ZENARI	SINGLE LINE DIAGRAM ET-PDC-2 WEST TANK AREA	SHEET SIZE A1
CHECKED BY A. ARAJI		SCALE NTS
APPROVED BY P. GIVENS	EDMONTON TERMINAL	DATE 16/08/04

PROJECT CODING	DRAWING NUMBER			
AFE	FACILITY ID	DOCUMENT NO	SHT NO	REV
01-13283	ET00	EE02815	02	A

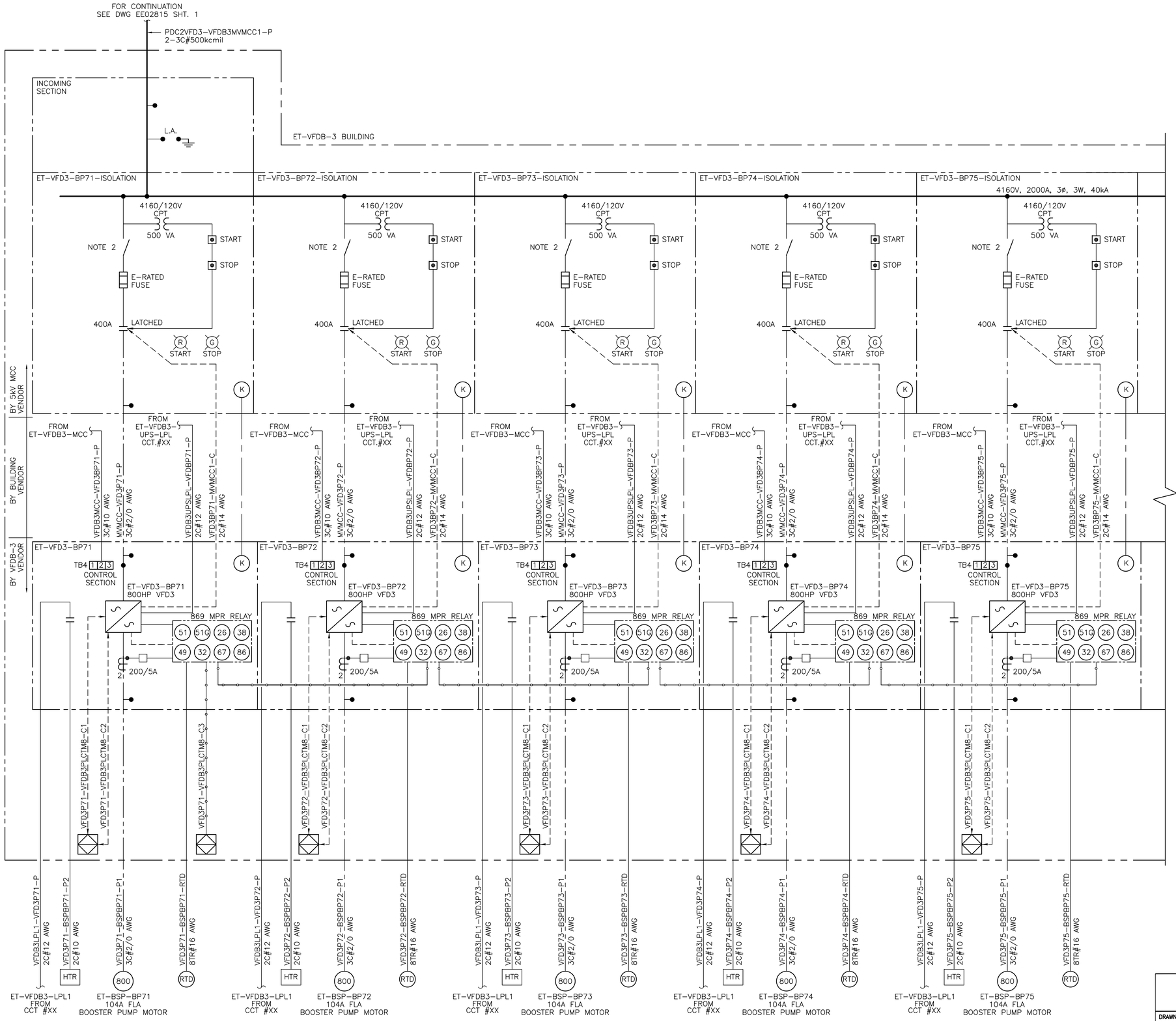

NOTES:

1. KEY INTERLOCK SHALL BE PROVIDED BETWEEN VFD3 CABINET AND MV MCC FEEDER SECTIONS AS SHOWN ON THE DRAWING.
2. DISCONNECT SWITCH FOR ISOLATION ONLY.

FOR INFO ONLY

TYTEC

TRANS MOUNTAIN

DRAWN BY N. ZENARI	SINGLE LINE DIAGRAM ET-VFD-3 (4160V) WEST TANK AREA	SHEET SIZE A1
CHECKED BY A. ARAJI		SCALE NTS
APPROVED BY P. GIVENS	EDMONTON TERMINAL	DATE 2016/10/24

PROJECT CODING	DRAWING NUMBER			
AFE	FACILITY ID	DOCUMENT NO	SHT NO	REV
01-13283	ET00	EE02818	01	A

NO.	REFERENCE DRAWING TITLE	REFERENCE DRAWING NO.	NO	DATE	REVISION	DRN	CHK	APPR
2	SINGLE LINE DIAGRAM ET-VFD-3 (4160V)	EE02818 SHT. 2						
1	SINGLE LINE DIAGRAM – PDC-2 WEST TANK AREA (4160V)	EE02815 SHT. 1	A	16/12/15	ISSUED FOR DBM – AFE# 01-13283	NZ	AA	PG

NOTES:

1. KEY INTERLOCK SHALL BE PROVIDED BETWEEN VFD3 CABINET AND MV MCC FEEDER SECTIONS AS SHOWN ON THE DRAWING.
2. DISCONNECT SWITCH FOR ISOLATION ONLY.

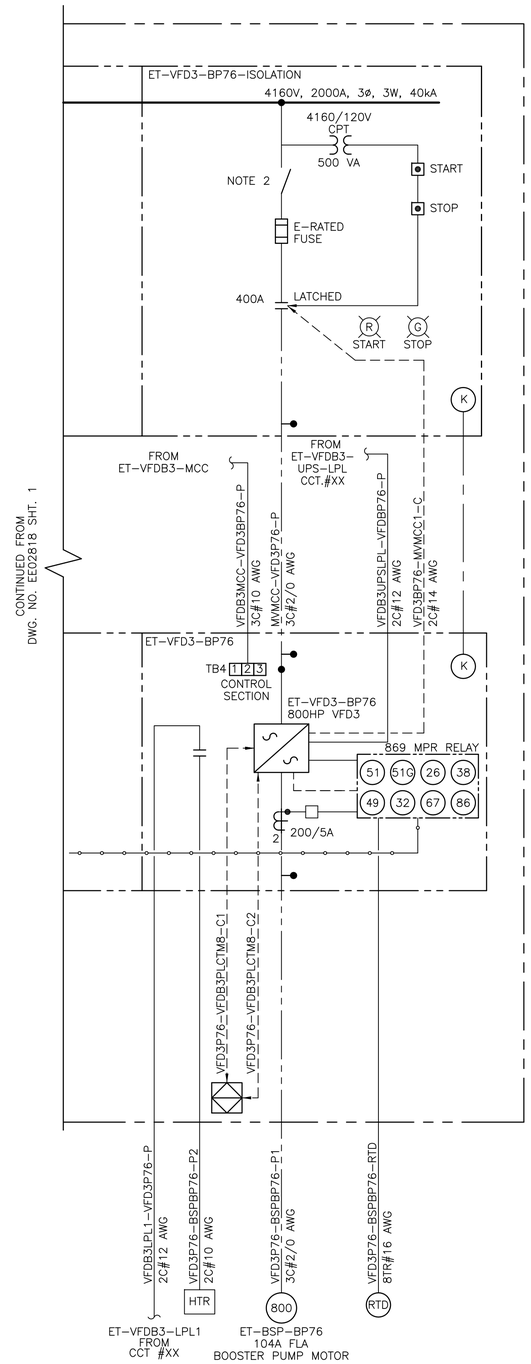

FOR INFO ONLY

TYTEC

TRANSMOUNTAIN

DRAWN BY N. ZENARI	SINGLE LINE DIAGRAM ET-VFD-3 (4160V) WEST TANK AREA		SHEET SIZE A1
CHECKED BY A. ARAJI			SCALE NTS
APPROVED BY P. GIVENS	EDMONTON TERMINAL		DATE 2016/10/24

PROJECT CODING	DRAWING NUMBER			
AFE	FACILITY ID	DOCUMENT NO	SHT NO	REV
01-13283	ET00	EE02818	02	A

NO.	REFERENCE DRAWING TITLE	REFERENCE DRAWING NO.
2	SINGLE LINE DIAGRAM ET-VFD-3 (4160V)	EE02818 SHT. 1
1	SINGLE LINE DIAGRAM – PDC-2 WEST TANK AREA (4160V)	EE02815 SHT. 1

NO	DATE	REVISION	DRN	CHK	APPR
A	16/12/15	ISSUED FOR DBM – AFE# 01-13283	NZ	AA	PG

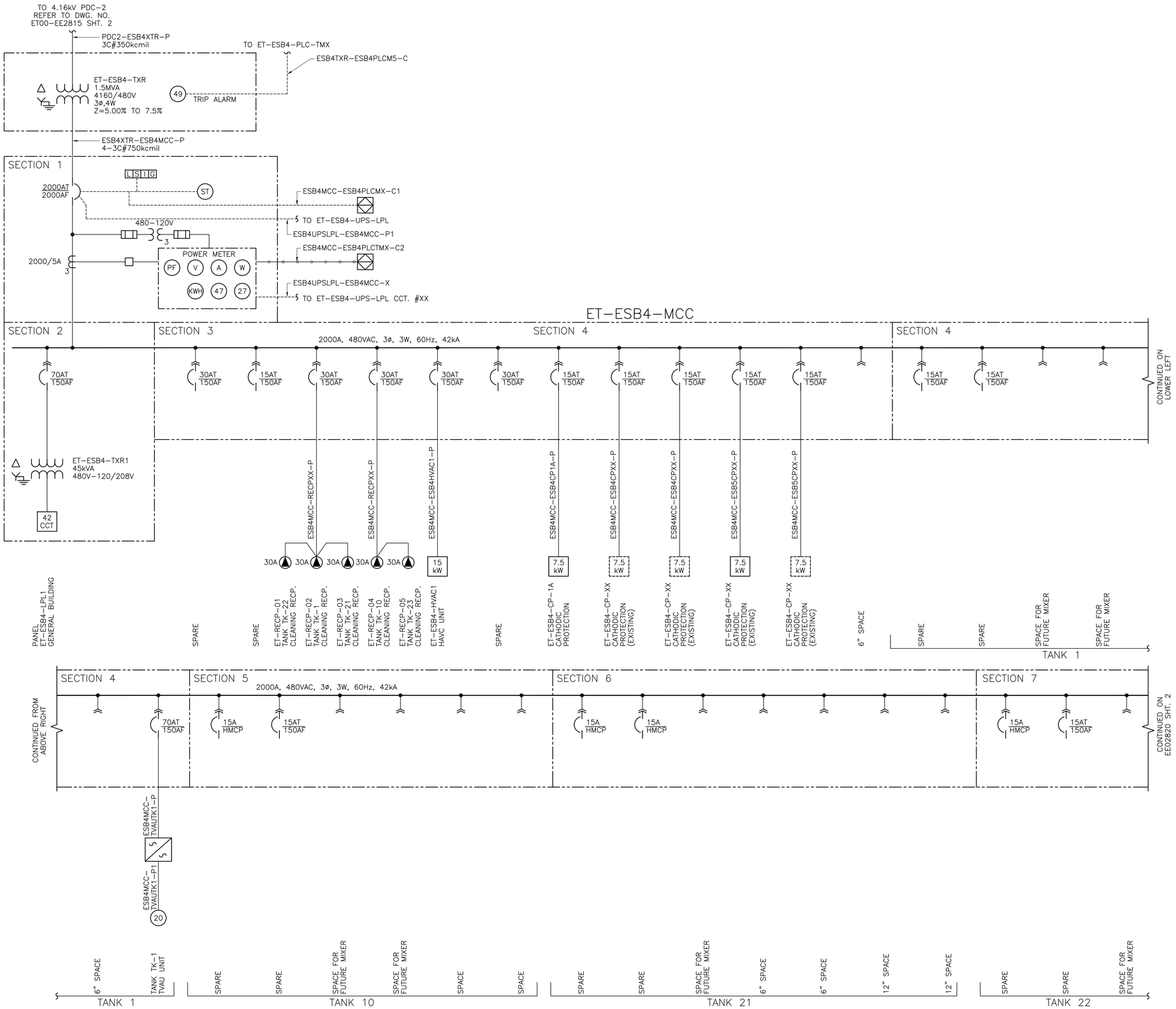

ISSUED FOR REVIEW

FOR INFO ONLY

TYTEC

TRANS MOUNTAIN

1	SINGLE LINE DIAGRAM ET-ESB4-MCC (480V)	EE02820 SHT. 2	A	16/12/15	ISSUED FOR DBM – AFE# 01-13283	NZ	AA	PG
NO.	REFERENCE DRAWING TITLE	REFERENCE DRAWING NO.	NO	DATE	REVISION	DRN	CHK	APPR

DRAWN BY N. ZENARI	SINGLE LINE DIAGRAM ET-ESB4-MCC (480V) WEST TANK AREA		SHEET SIZE A1
CHECKED BY A. ARAJI			SCALE NTS
APPROVED BY P. GIVENS	EDMONTON TERMINAL		DATE 16/10/24
PROJECT CODING AFE	DRAWING NUMBER FACILITY ID	DOCUMENT NO	SHT NO / REV
01-13283	ET00	EE02820	01 / A

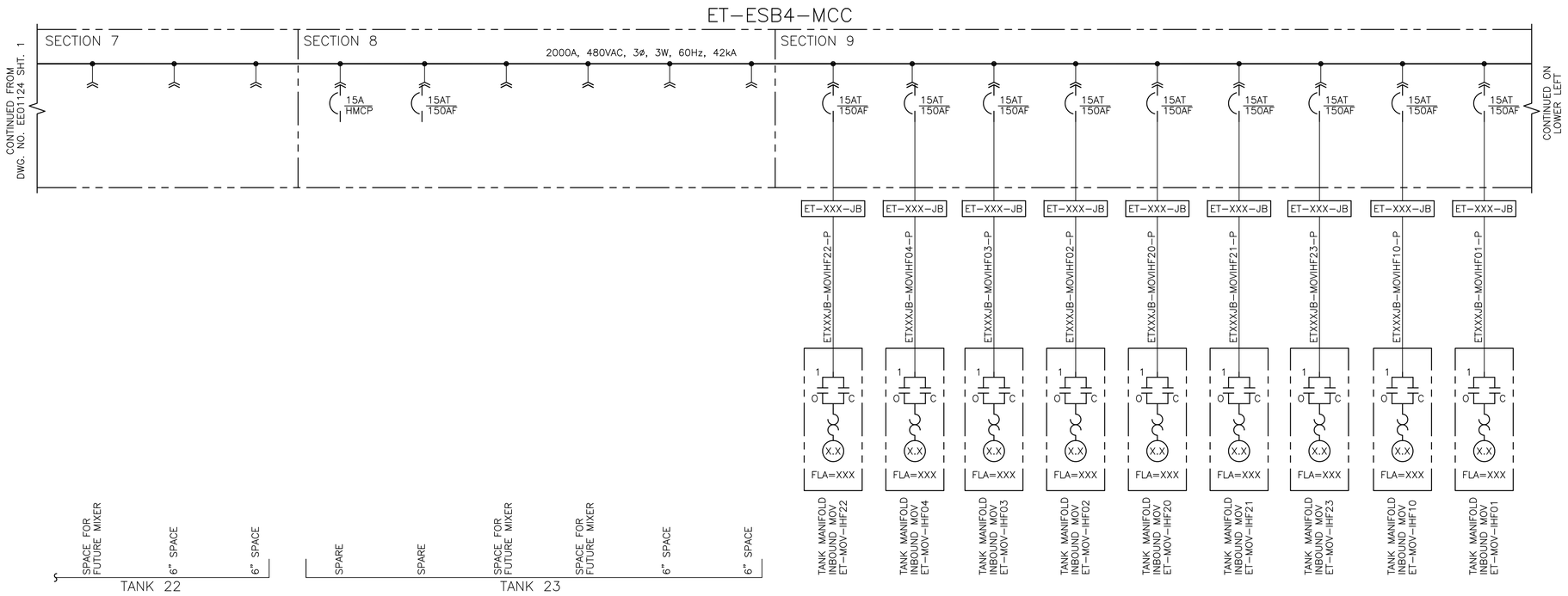

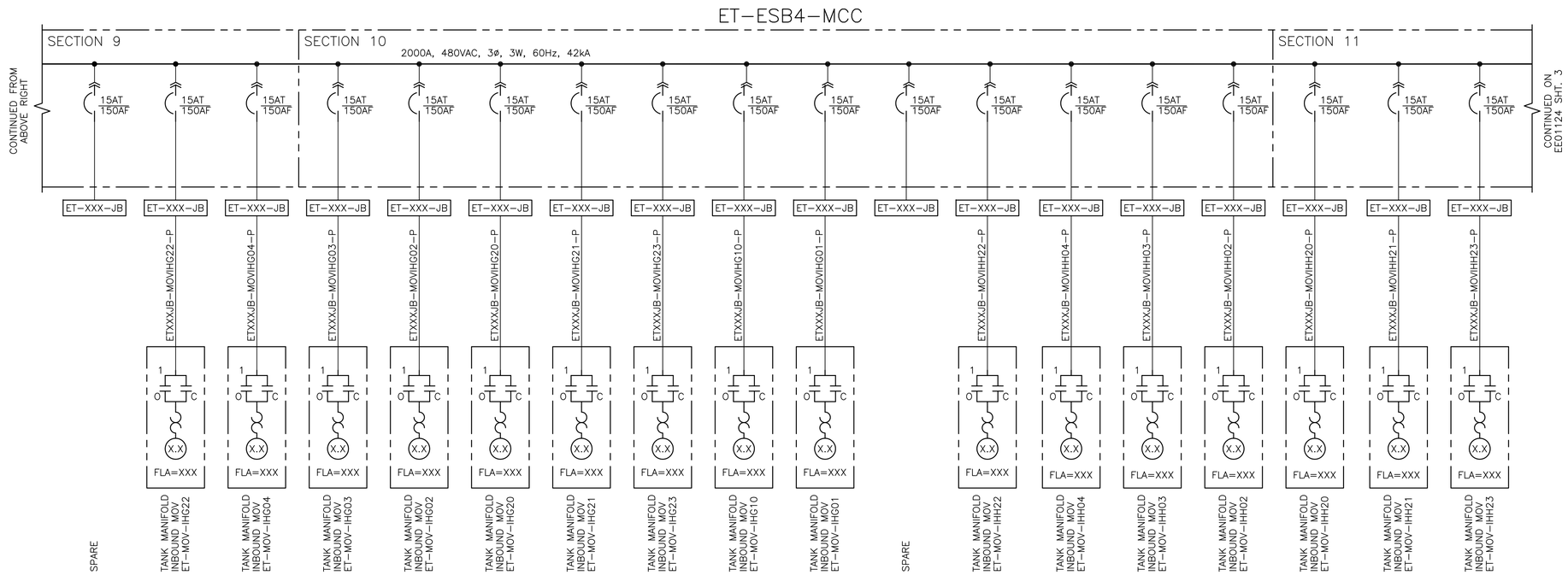

ISSUED FOR REVIEW

FOR INFO ONLY

TYTEC

TRANS MOUNTAIN

NO.	REFERENCE DRAWING TITLE	REFERENCE DRAWING NO.	NO	DATE	REVISION	DRN	CHK	APPR
2	SINGLE LINE DIAGRAM ET–ESB4–MCC (480V)	EE02820 SHT. 3						
1	SINGLE LINE DIAGRAM ET–ESB4–MCC (480V)	EE02820 SHT. 1	A	16/12/15	ISSUED FOR DBM – AFE# 01–13283	NZ	AA	PG

DRAWN BY N. ZENARI	SINGLE LINE DIAGRAM ET–ESB4–MCC (480V) WEST TANK AREA		SHEET SIZE A1
CHECKED BY A. ARAJI			SCALE NTS
APPROVED BY P. GIVENS	EDMONTON TERMINAL		DATE 16/10/24
PROJECT CODING	DRAWING NUMBER		
AFE	FACILITY ID	DOCUMENT NO	SHT NO / REV
01–13283	ET00	EE02820	02 / A

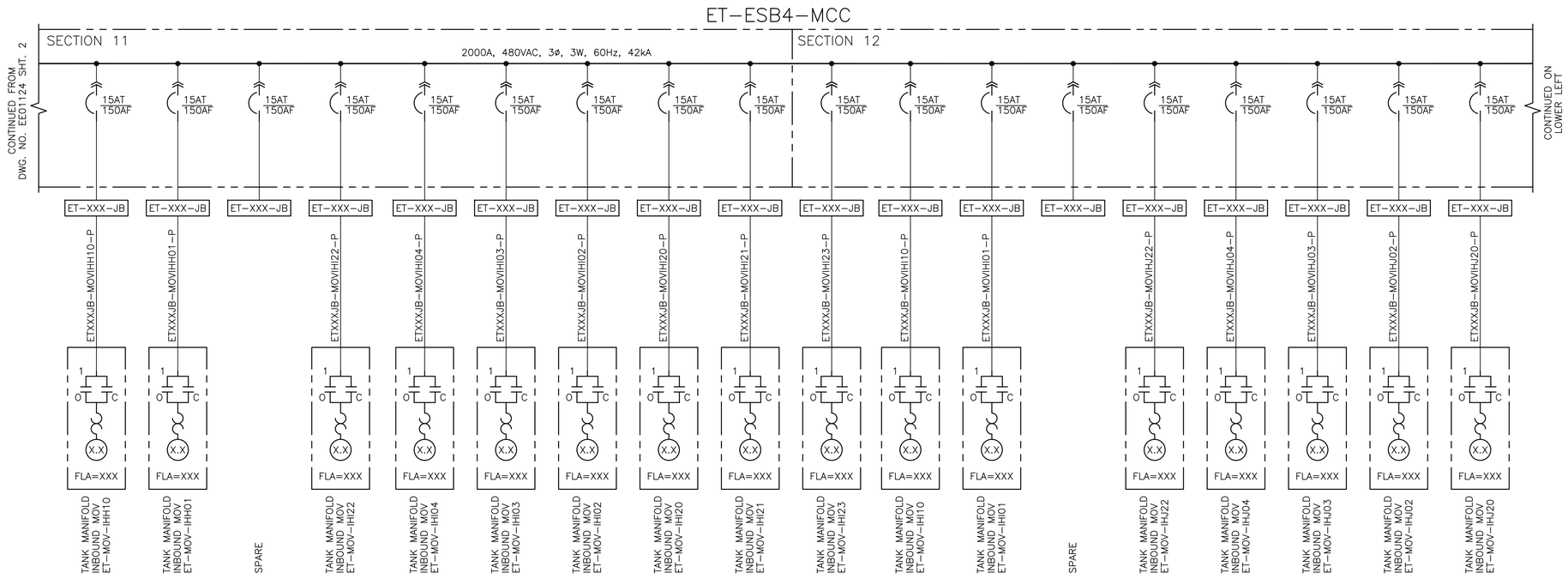

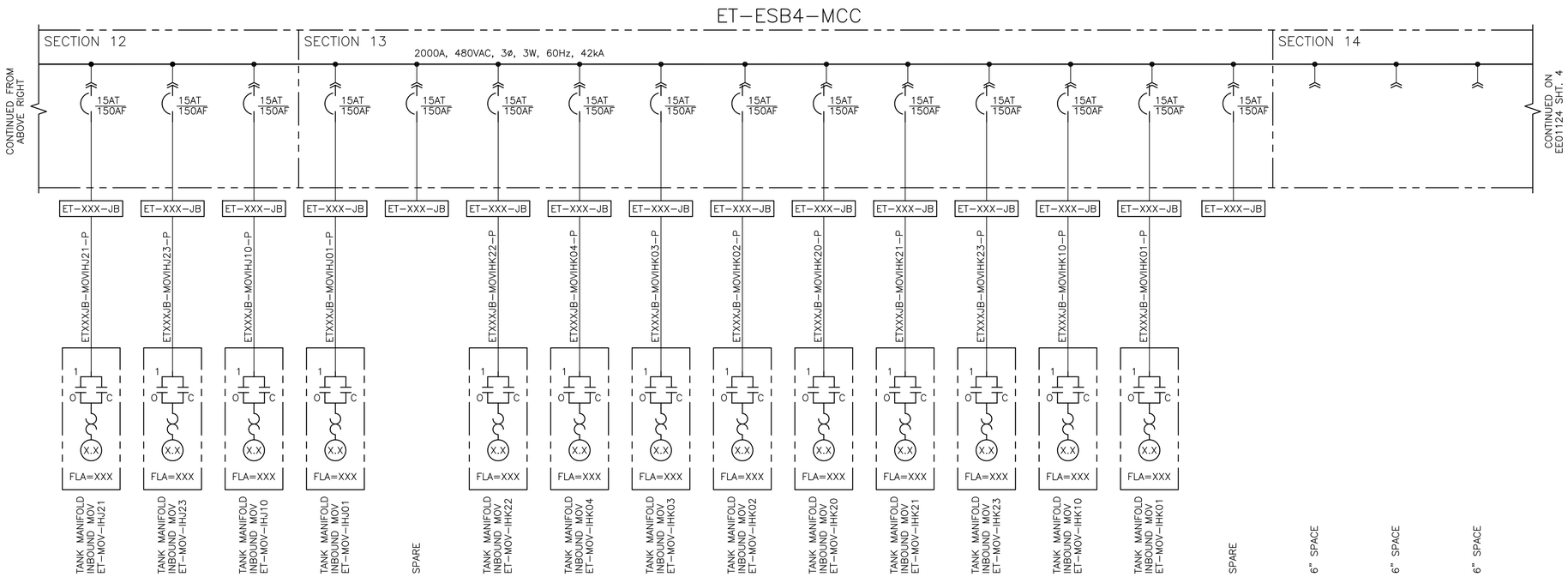

ISSUED FOR REVIEW

FOR INFO ONLY

TYTEC

TRANSMOUNTAIN

2	SINGLE LINE DIAGRAM ET–ESB4–MCC (480V)	EE02820 SHT. 4						
1	SINGLE LINE DIAGRAM ET–ESB4–MCC (480V)	EE02820 SHT. 2	A	16/12/15	ISSUED FOR DBM – AFE# 01–13283	NZ	AA	PG
NO.	REFERENCE DRAWING TITLE	REFERENCE DRAWING NO.	NO	DATE	REVISION	DRN	CHK	APPR

DRAWN BY N. ZENARI	SINGLE LINE DIAGRAM ET–ESB4–MCC (480V) WEST TANK AREA	SHEET SIZE A1
CHECKED BY A. ARAJI		SCALE NTS
APPROVED BY P. GIVENS	EDMONTON TERMINAL	DATE 16/10/24

PROJECT CODING	DRAWING NUMBER			
AFE	FACILITY ID	DOCUMENT NO	SHT NO	REV
01–13283	ET00	EE02820	03	A

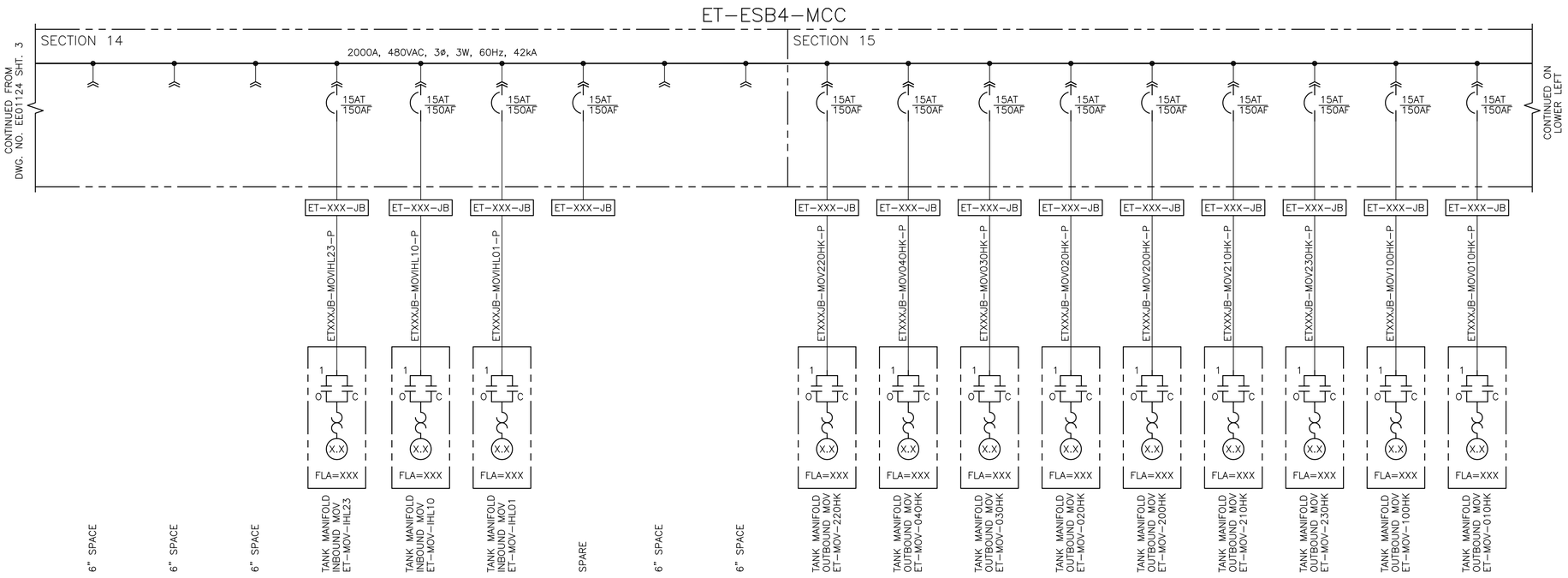

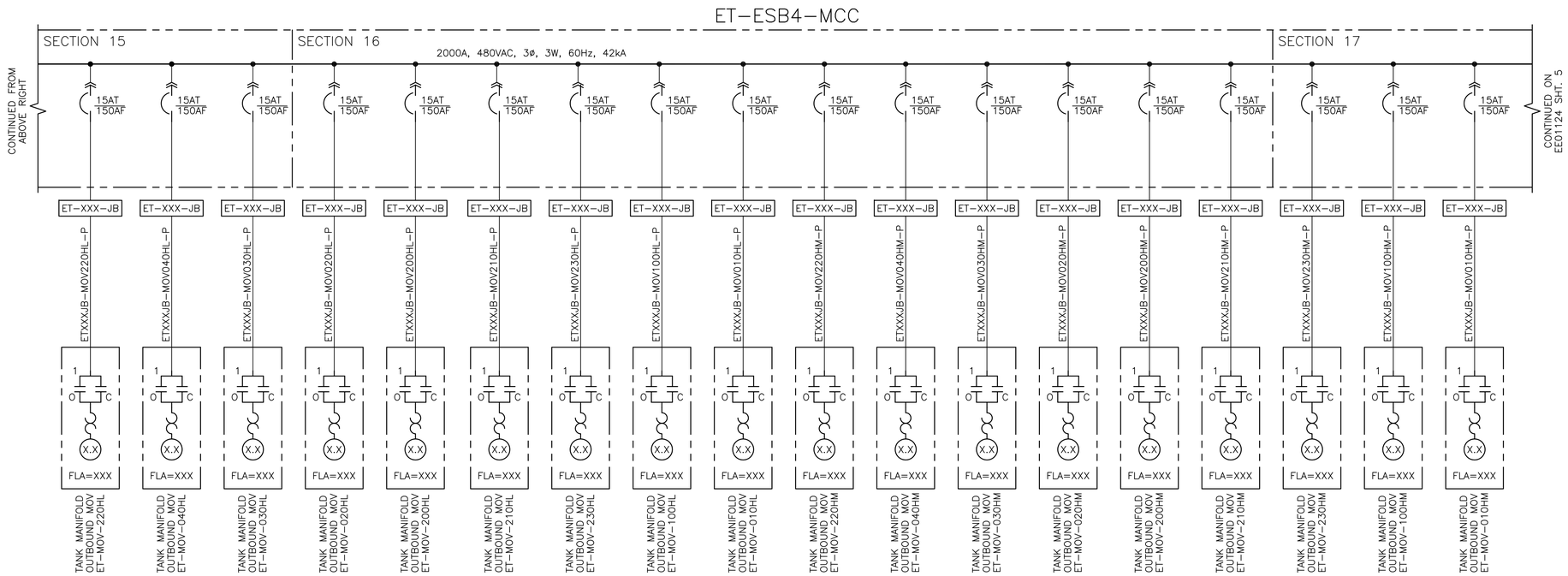

ISSUED FOR REVIEW

FOR INFO ONLY

TYTEC

TRANS MOUNTAIN

2	SINGLE LINE DIAGRAM ET–ESB4–MCC (480V)	EE02820 SHT. 5						
1	SINGLE LINE DIAGRAM ET–ESB4–MCC (480V)	EE02820 SHT. 3	A	16/12/15	ISSUED FOR DBM – AFE# 01–13283	NZ	AA	PG
NO.	REFERENCE DRAWING TITLE	REFERENCE DRAWING NO.	NO	DATE	REVISION	DRN	CHK	APPR

DRAWN BY N. ZENARI
CHECKED BY A. ARAJI
APPROVED BY P. GIVENS

SINGLE LINE DIAGRAM
ET–ESB4–MCC (480V)
WEST TANK AREA
EDMONTON TERMINAL

SHEET SIZE A1
SCALE NTS
DATE 16/10/24

PROJECT CODING	DRAWING NUMBER			
AFE	FACILITY ID	DOCUMENT NO	SHT NO	REV
01–13283	ET00	EE02820	04	A

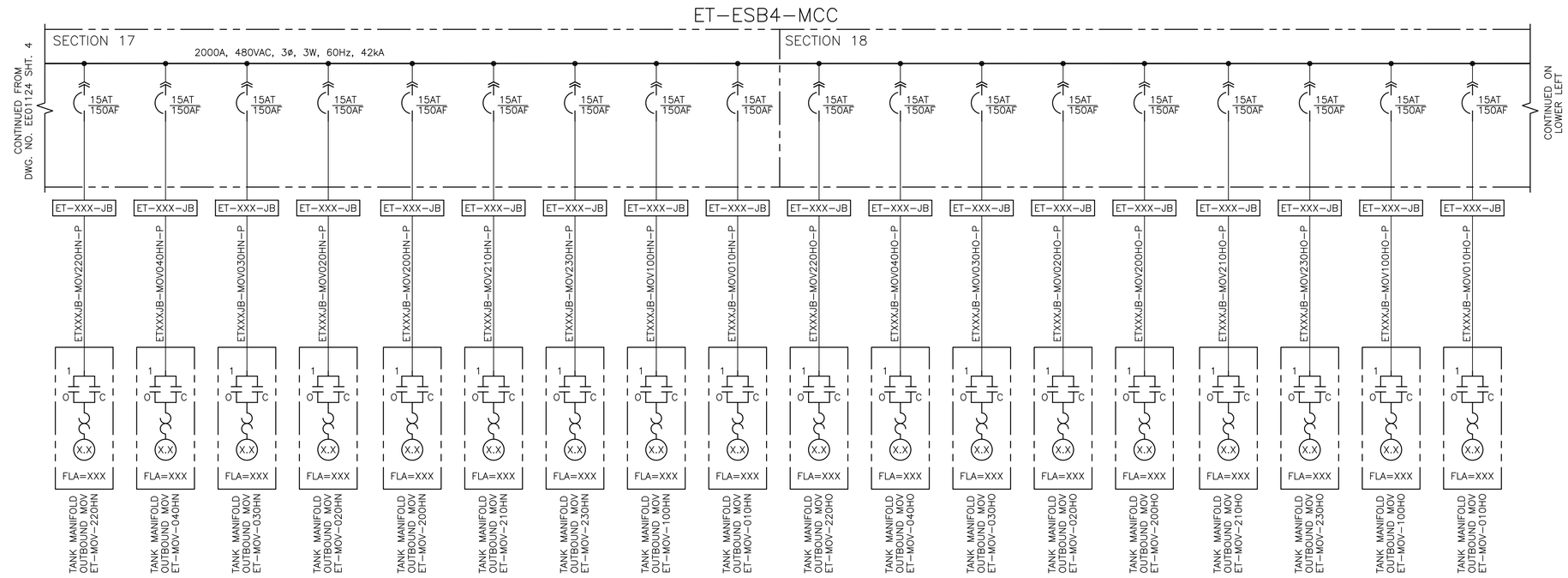

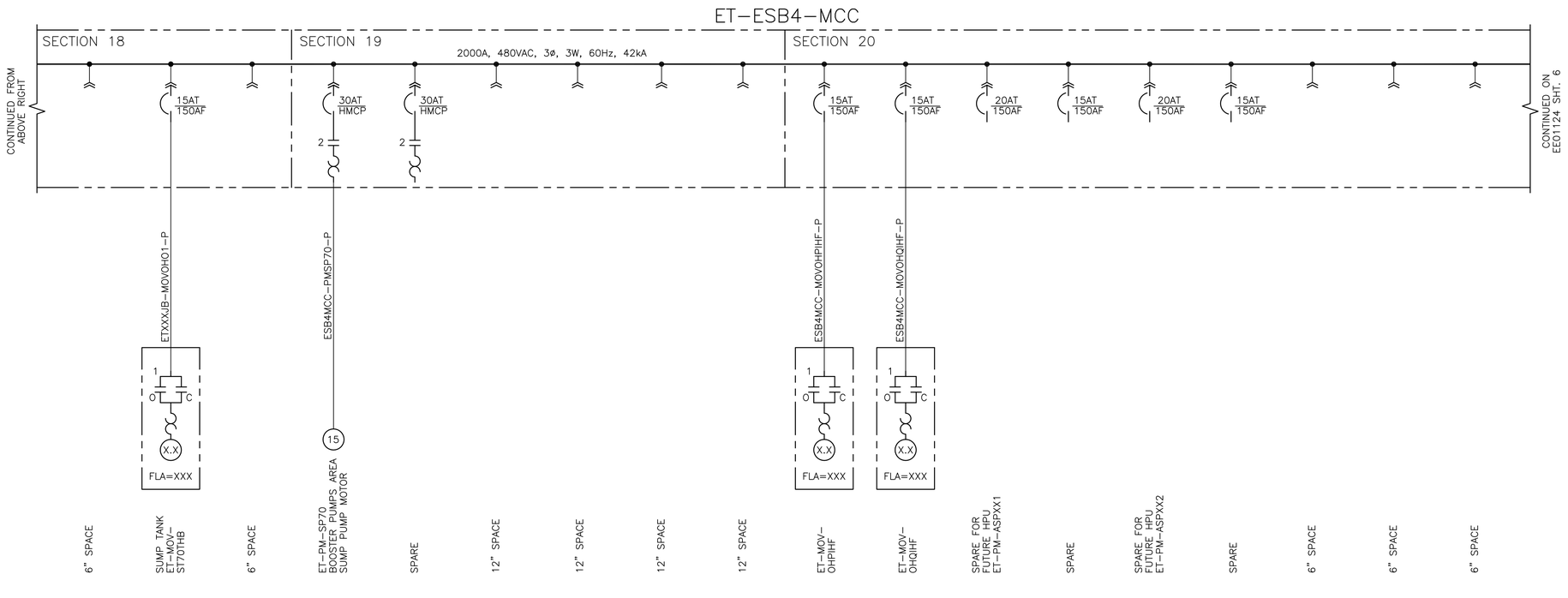

NO.	REFERENCE DRAWING TITLE	REFERENCE DRAWING NO.	NO	DATE	REVISION	DRN	CHK	APPR
2	SINGLE LINE DIAGRAM ET–ESB4–MCC (480V)	EE02820 SHT. 6						
1	SINGLE LINE DIAGRAM ET–ESB4–MCC (480V)	EE02820 SHT. 4	A	16/12/15	ISSUED FOR DBM – AFE# 01–13283	NZ	AA	PG

ISSUED FOR REVIEW

FOR INFO ONLY

TYTEC

TRANSMOUNTAIN

DRAWN BY N. ZENARI	SINGLE LINE DIAGRAM ET–ESB4–MCC (480V) WEST TANK AREA	SHEET SIZE A1
CHECKED BY A. ARAJI		SCALE NTS
APPROVED BY P. GIVENS	EDMONTON TERMINAL	DATE 16/10/24

PROJECT CODING	DRAWING NUMBER			
AFE	FACILITY ID	DOCUMENT NO	SHT NO	REV
01–13283	ET00	EE02820	05	A

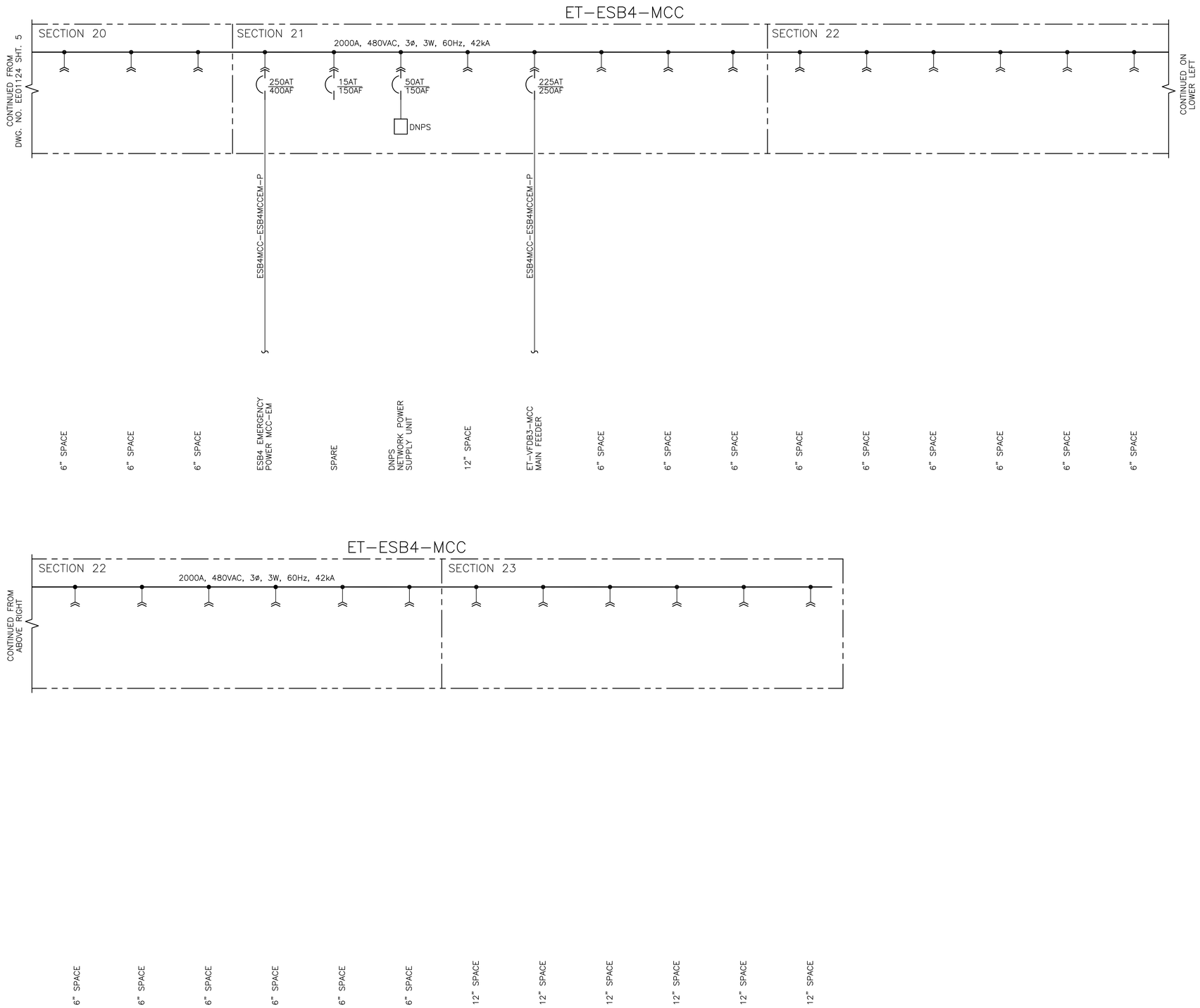

ISSUED FOR REVIEW

FOR INFO ONLY

TYTEC

TRANS MOUNTAIN

NO.	REFERENCE DRAWING TITLE	REFERENCE DRAWING NO.	NO	DATE	REVISION	DRN	CHK	APPR
1	SINGLE LINE DIAGRAM ET–ESB4–MCC (480V)	EE02820 SHT. 5	A	16/12/15	ISSUED FOR DBM – AFE# 01–13283	NZ	AA	PG

DRAWN BY N. ZENARI	SINGLE LINE DIAGRAM ET–ESB4–MCC (480V) WEST TANK AREA	SHEET SIZE A1
CHECKED BY A. ARAJI		SCALE NTS
APPROVED BY P. GIVENS	EDMONTON TERMINAL	DATE 16/10/24

PROJECT CODING	DRAWING NUMBER			
AFE	FACILITY ID	DOCUMENT NO	SHT NO	REV
01–13283	ET00	EE02820	06	A

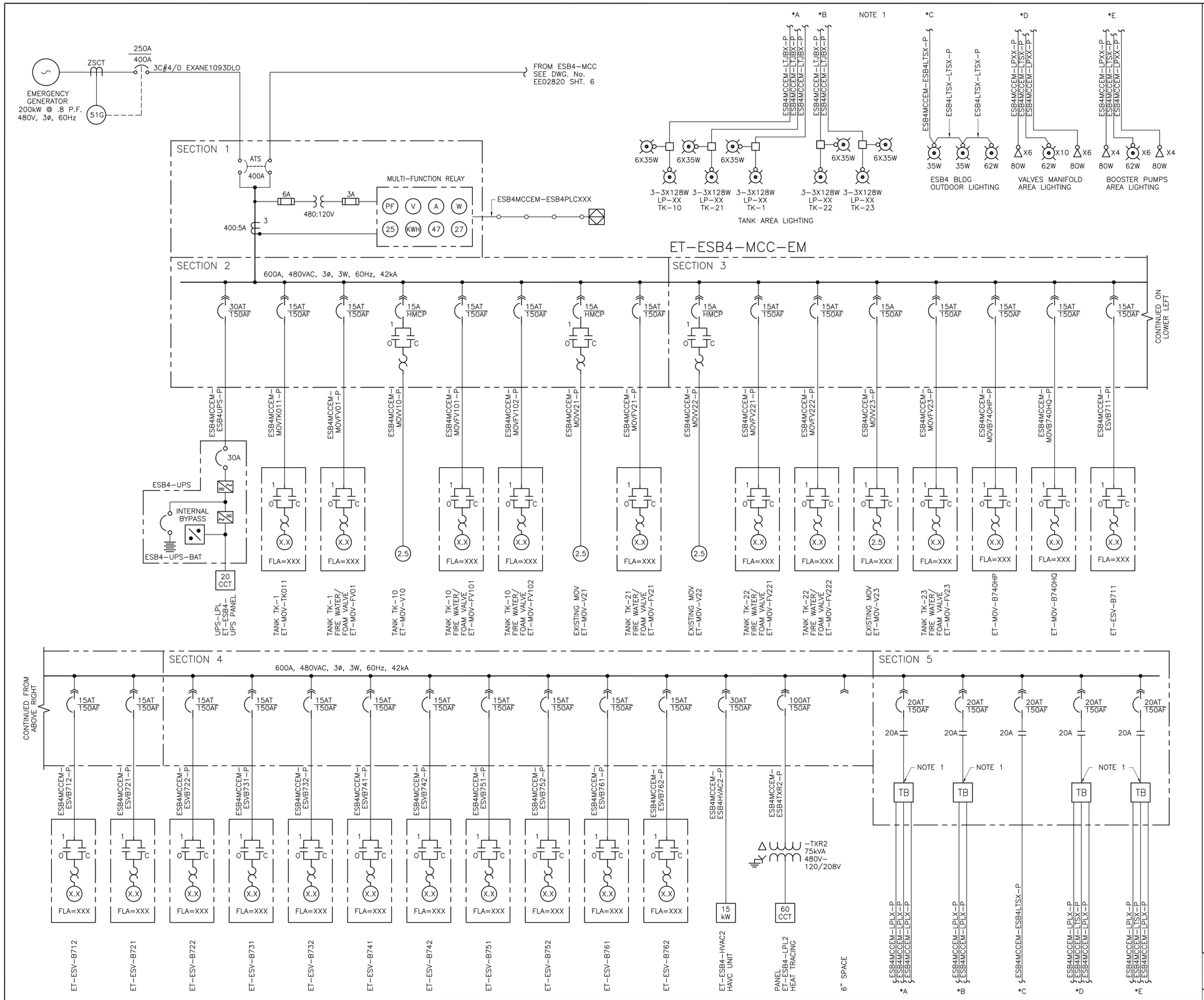

NOTES:

1. LIGHTING DESIGN TO BE DETERMINED IN DETAILED ENGINEERING.

ISSUED FOR REVIEW

FOR INFO ONLY

TYTEC

TRANS MOUNTAIN

1	SINGLE LINE DIAGRAM ET-ESB4-MCC (480V)	EE02820 SHT. 6	A	16/12/15	ISSUED FOR DBM – AFE# 01-13283	NZ	AA	PG
NO.	REFERENCE DRAWING TITLE	REFERENCE DRAWING NO.	NO	DATE	REVISION	DRN	CHK	APPR

DRAWN BY N. ZENARI	SINGLE LINE DIAGRAM ET-ESB4-MCC-EM (480V) WEST TANK AREA	SHEET SIZE A1
CHECKED BY A. ARAJI		SCALE NTS
APPROVED BY P. GIVENS	EDMONTON TERMINAL	DATE 16/10/24

PROJECT CODING	DRAWING NUMBER			
AFE	FACILITY ID	DOCUMENT NO	SHT NO	REV
01-13283	ET00	EE02820	07	A

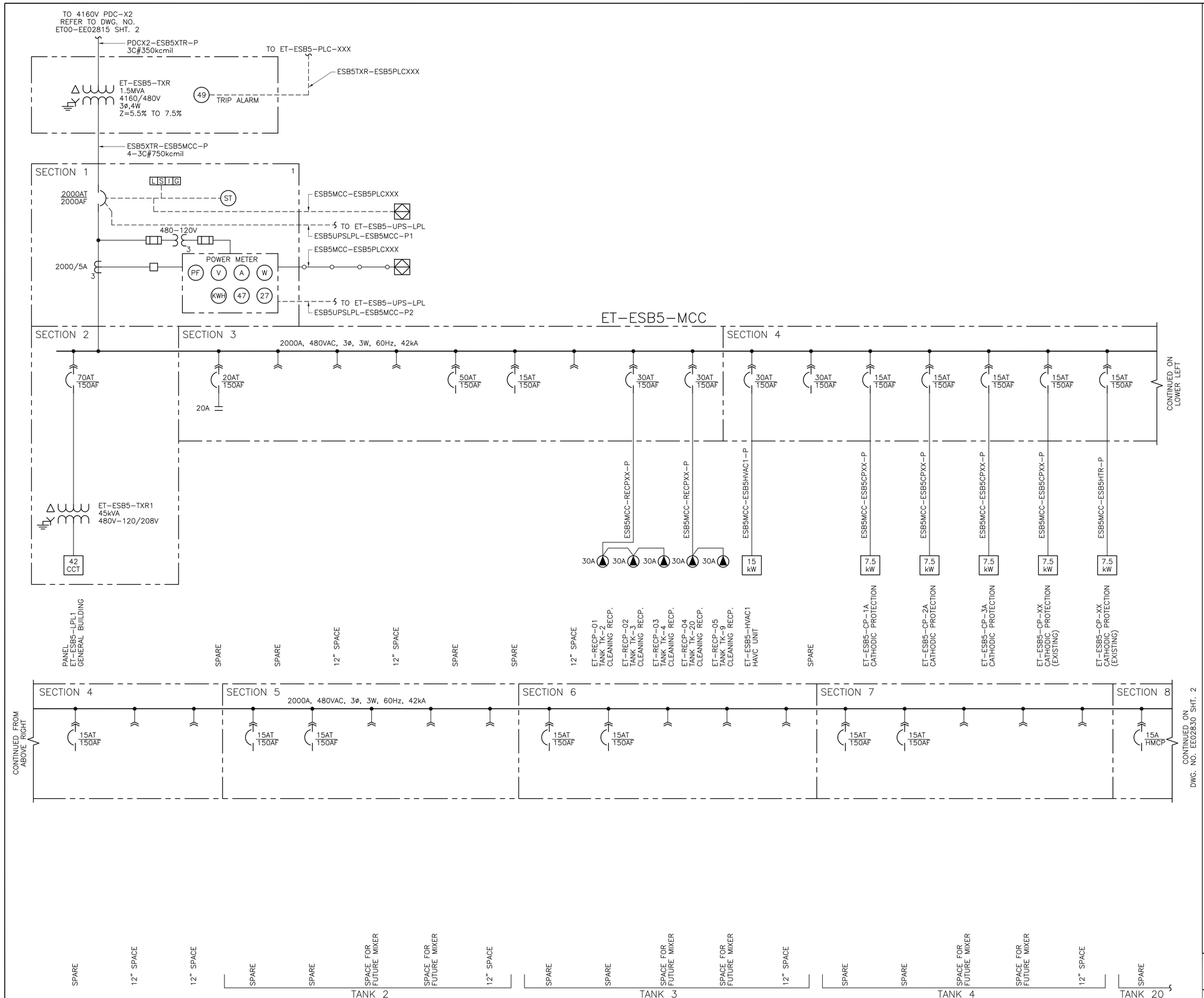

ISSUED FOR REVIEW

FOR INFO ONLY

TYTEC

TRANS MOUNTAIN

1	SINGLE LINE DIAGRAM ET-ESB5-MCC (480V)	EE01123 SHT. 2	A	16/12/15	ISSUED FOR DBM – AFE# 01-13283	NZ	AA	PG
NO.	REFERENCE DRAWING TITLE	REFERENCE DRAWING NO.	NO	DATE	REVISION	DRN	CHK	APPR

DRAWN BY N. ZENARI
CHECKED BY A. ARAJI
APPROVED BY P. GIVENS

SINGLE LINE DIAGRAM
ET-ESB5-MCC (480V)
WEST TANK AREA

EDMONTON TERMINAL

SHEET SIZE A1
SCALE NTS
DATE 16/10/24

PROJECT CODING	DRAWING NUMBER			
AFE	FACILITY ID	DOCUMENT NO	SHT NO	REV
01-13283	ET00	EE02830	01	A

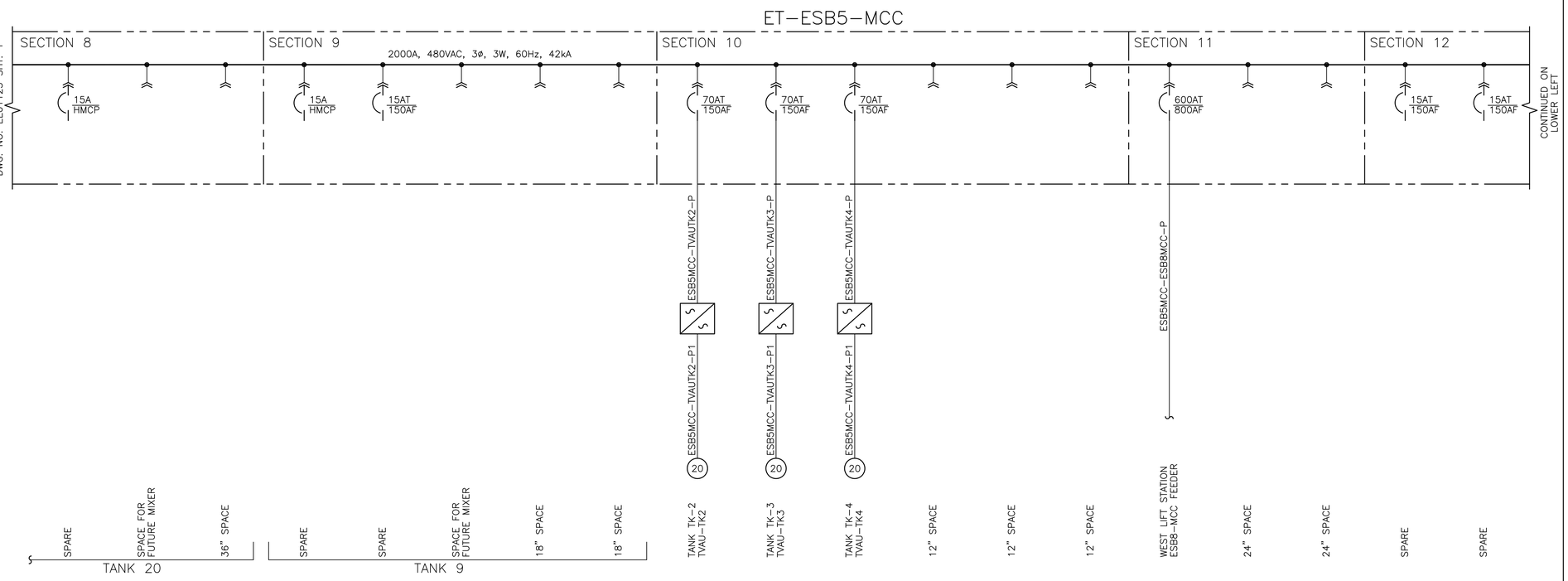

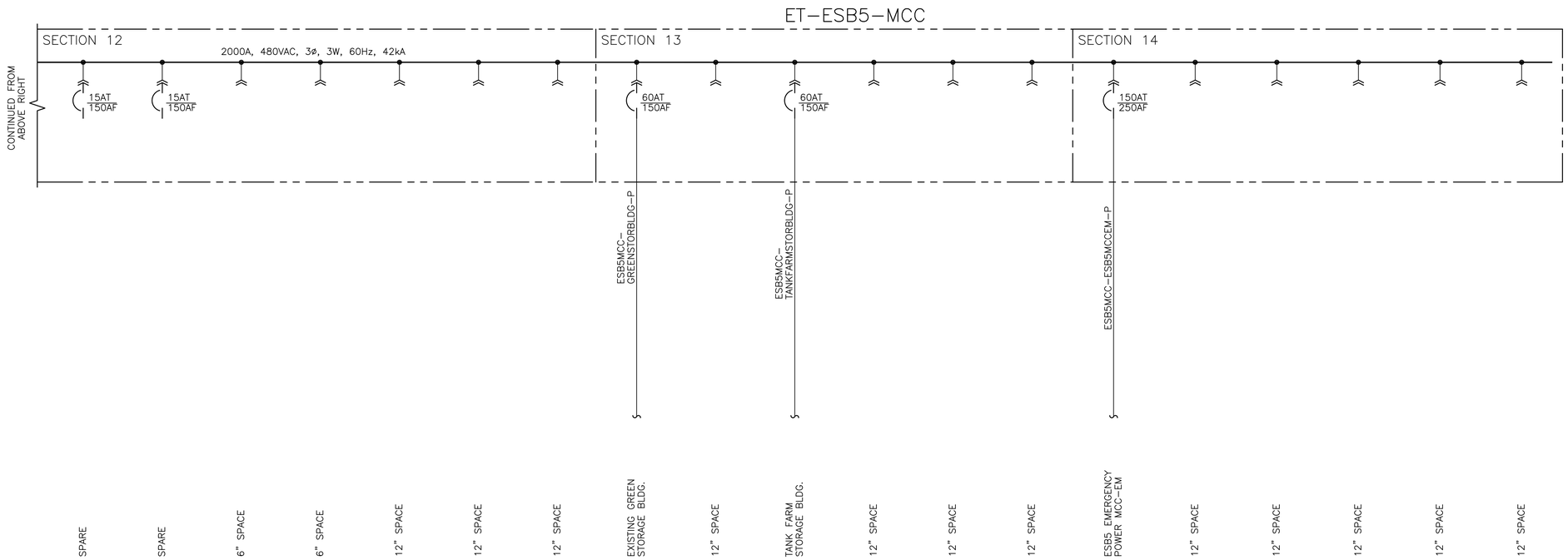

ISSUED FOR REVIEW

FOR INFO ONLY

TYTEC

TRANSMOUNTAIN

NO.	REFERENCE DRAWING TITLE	REFERENCE DRAWING NO.	NO	DATE	REVISION	DRN	CHK	APPR
1	SINGLE LINE DIAGRAM ET–ESB5–MCC (480V)	EE02830 SHT. 1	A	16/12/15	ISSUED FOR DBM – AFE# 01–13283	NZ	AA	PG

DRAWN BY N. ZENARI	SINGLE LINE DIAGRAM ET–ESB5–MCC (480V) WEST TANK AREA		SHEET SIZE A1
CHECKED BY A. ARAJI			SCALE NTS
APPROVED BY P. GIVENS	EDMONTON TERMINAL		DATE 16/10/24

PROJECT CODING	DRAWING NUMBER			
AFE	FACILITY ID	DOCUMENT NO	SHT NO	REV
01–13283	ET00	EE02830	02	A

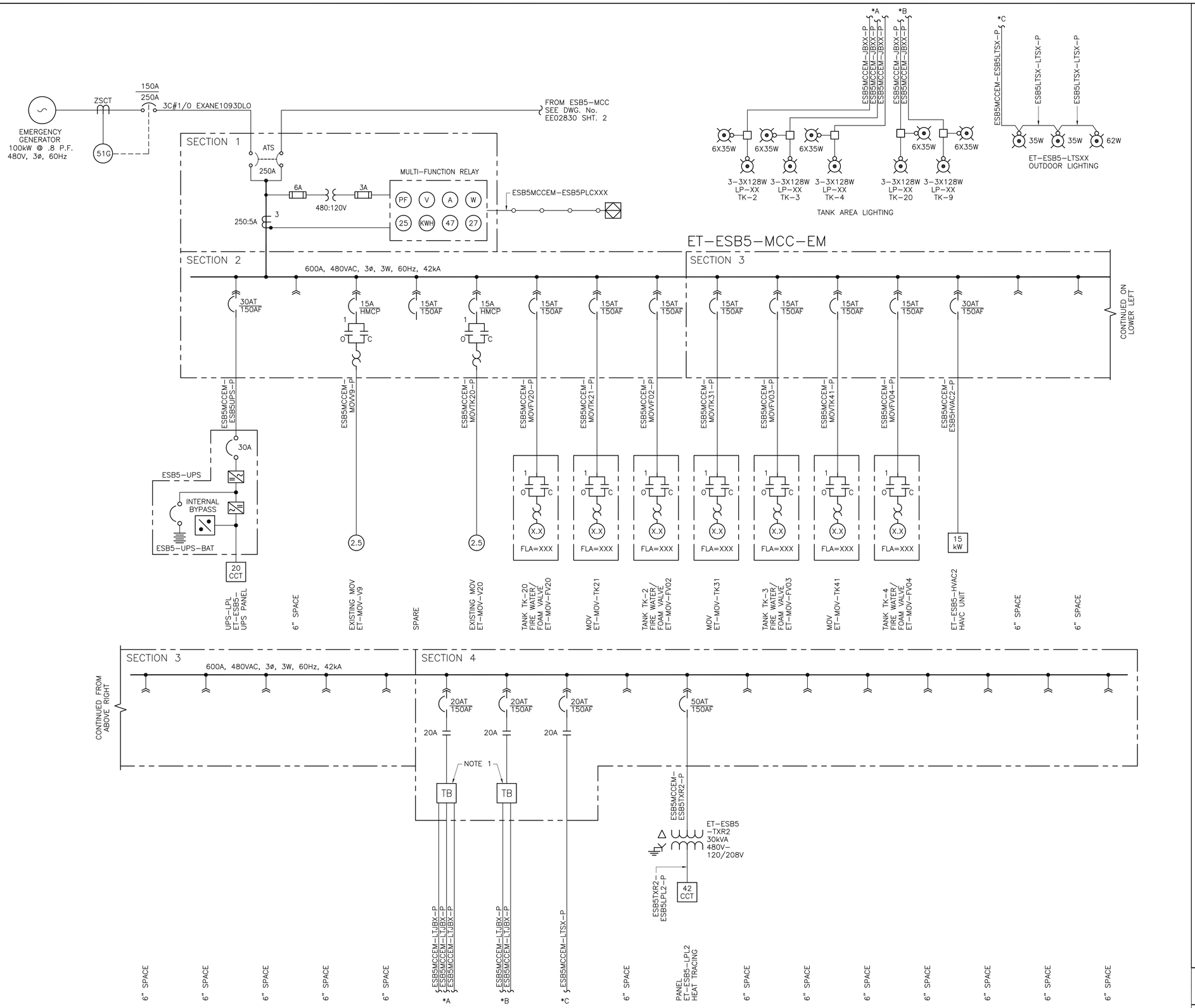

NOTES:

1. LIGHTING DESIGN TO BE DETERMINED IN DETAILED ENGINEERING.

ISSUED FOR REVIEW

FOR INFO ONLY

TYTEC

TRANS MOUNTAIN

1	SINGLE LINE DIAGRAM ET-ESB5-MCC (480V)	EE01123 SHT. 2	A	16/12/15	ISSUED FOR DBM – AFE# 01-13283	NZ	AA	PG
NO.	REFERENCE DRAWING TITLE	REFERENCE DRAWING NO.	NO	DATE	REVISION	DRN	CHK	APPR

DRAWN BY N. ZENARI	SINGLE LINE DIAGRAM ET-ESB5-MCC-EM (480V) WEST TANK AREA	SHEET SIZE A1
CHECKED BY A. ARAJI		SCALE NTS
APPROVED BY P. GIVENS	EDMONTON TERMINAL	DATE 16/10/24

PROJECT CODING	DRAWING NUMBER			
AFE	FACILITY ID	DOCUMENT NO	SHT NO	REV
01-13283	ET00	EE02830	03	A

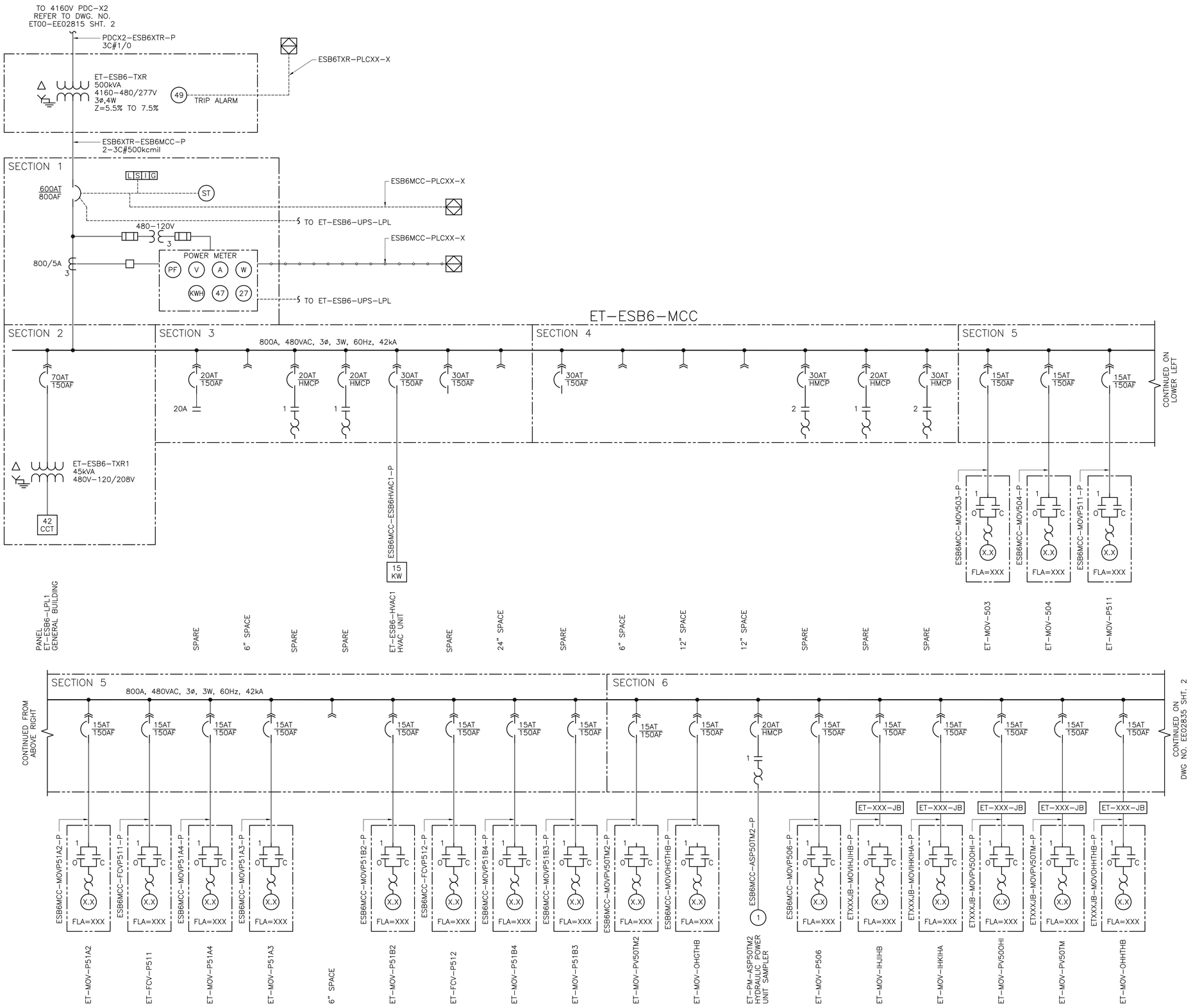

ISSUED FOR REVIEW

FOR INFO ONLY

TYTEC

TRANS MOUNTAIN

1	SINGLE LINE DIAGRAM ET-ESB6-MCC (480V)	EE02835 SHT. 2	A	16/12/15	ISSUED FOR DBM – AFE# 01-13283	NZ	AA	PG
NO.	REFERENCE DRAWING TITLE	REFERENCE DRAWING NO.	NO	DATE	REVISION	DRN	CHK	APPR

DRAWN BY N. ZENARI	SINGLE LINE DIAGRAM ET-ESB6-MCC (480V) WEST TANK AREA	SHEET SIZE A1
CHECKED BY A. ARAJI		SCALE NTS
APPROVED BY P. GIVENS	EDMONTON TERMINAL	DATE 16/10/24

PROJECT CODING	DRAWING NUMBER			
AFE	FACILITY ID	DOCUMENT NO	SHT NO	REV
01-13283	ET00	EE02835	01	A

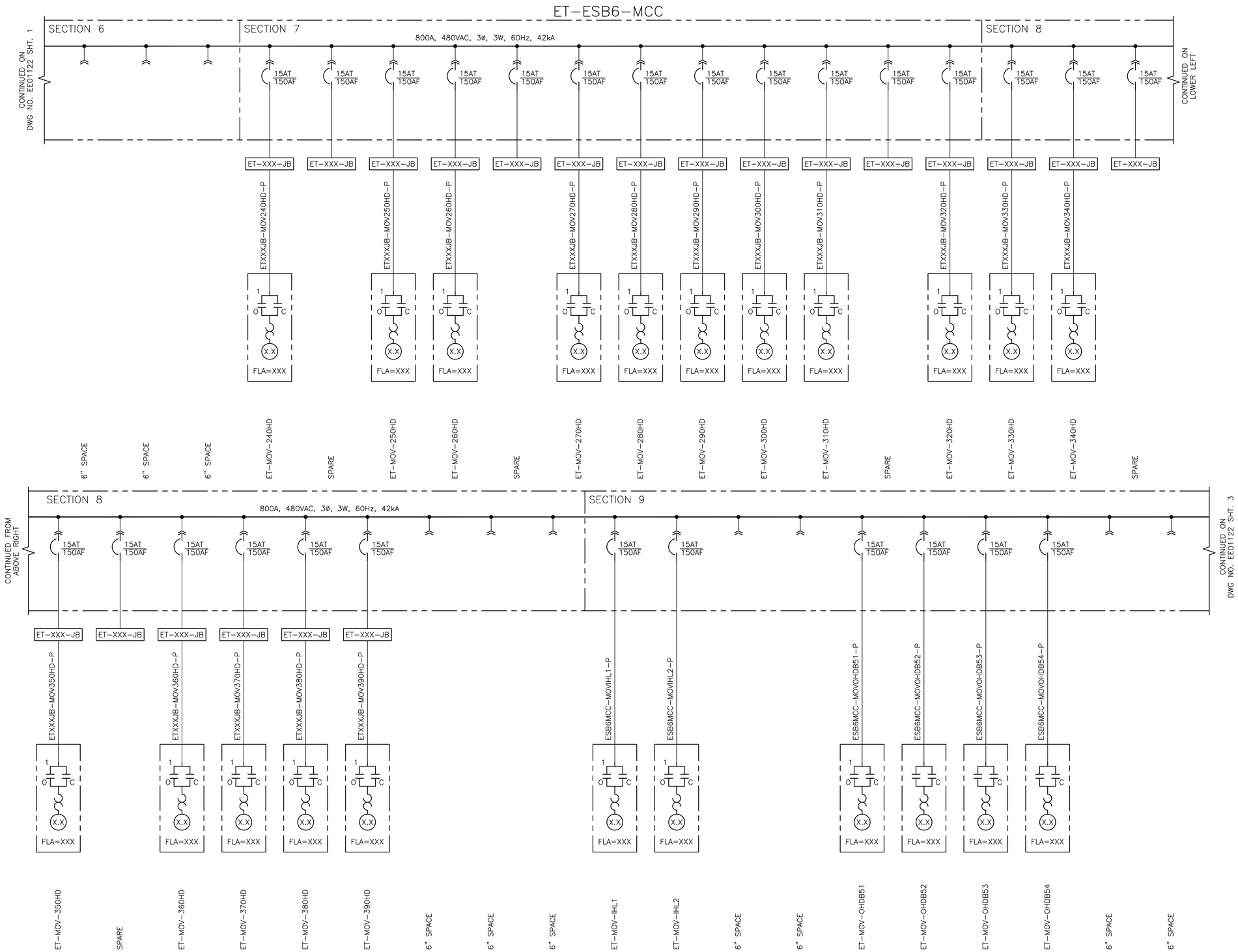

ISSUED FOR REVIEW

FOR INFO ONLY

TYTEC

TRANS MOUNTAIN

NO.	REFERENCE DRAWING TITLE	REFERENCE DRAWING NO.
2	SINGLE LINE DIAGRAM ET–ESB6–MCC (480V)	EE02835 SHT. 3
1	SINGLE LINE DIAGRAM ET–ESB6–MCC (480V)	EE02835 SHT. 1

NO	DATE	REVISION	DRN	CHK	APPR
A	16/12/15	ISSUED FOR DBM – AFE# 01–13283	NZ	AA	PG

DRAWN BY N. ZENARI	SINGLE LINE DIAGRAM ET–ESB6–MCC (480V) WEST TANK AREA		SHEET SIZE A1
CHECKED BY A. ARAJI			SCALE NTS
APPROVED BY P. GIVENS	EDMONTON TERMINAL		DATE 16/10/24

PROJECT CODING	DRAWING NUMBER			
AFE	FACILITY ID	DOCUMENT NO	SHT NO	REV
01–13283	ET00	EE02835	02	A

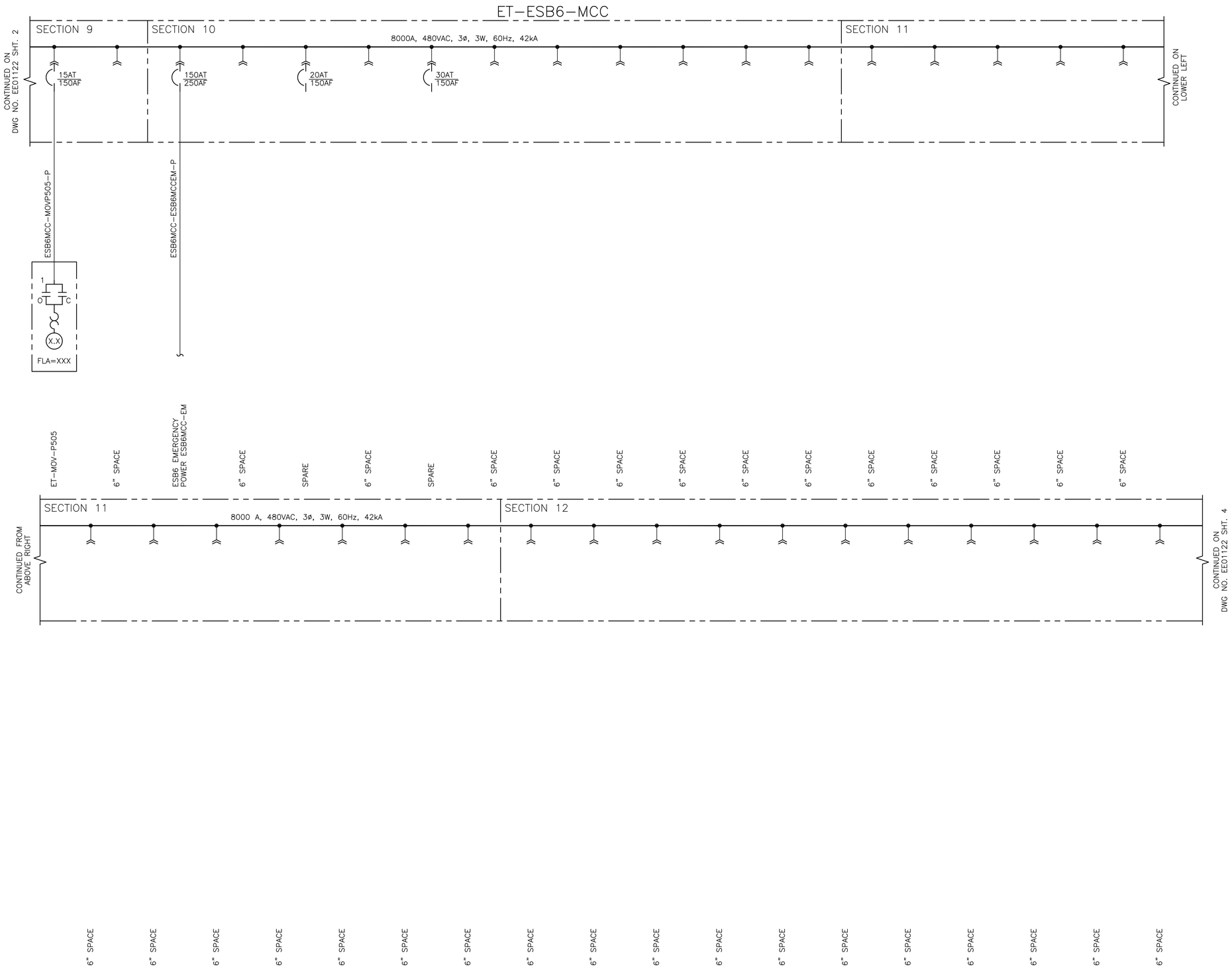

ISSUED FOR REVIEW

FOR INFO ONLY

TYTEC

TRANS MOUNTAIN

NO.	REFERENCE DRAWING TITLE	REFERENCE DRAWING NO.	NO	DATE	REVISION	DRN	CHK	APPR
2	SINGLE LINE DIAGRAM ET–ESB6–MCC (480V)	EE02835 SHT. 4						
1	SINGLE LINE DIAGRAM ET–ESB6–MCC (480V)	EE02835 SHT. 2	A	16/12/15	ISSUED FOR DBM – AFE# 01–13283	NZ	AA	PG

DRAWN BY N. ZENARI	SINGLE LINE DIAGRAM ET–ESB6–MCC (480V) WEST TANK AREA	SHEET SIZE A1
CHECKED BY A. ARAJI		SCALE NTS
APPROVED BY P. GIVENS	EDMONTON TERMINAL	DATE 16/10/24

PROJECT CODING	DRAWING NUMBER			
AFE	FACILITY ID	DOCUMENT NO	SHT NO	REV
01–13283	ET00	EE02835	03	A

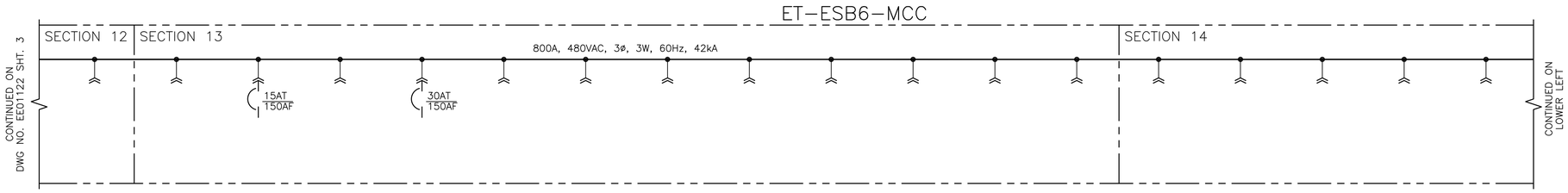

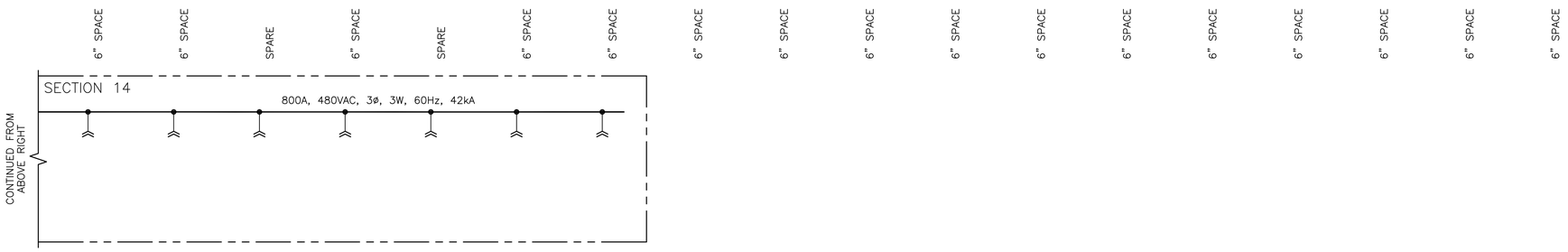

ISSUED FOR REVIEW

FOR INFO ONLY

TYTEC

TRANS MOUNTAIN

1	SINGLE LINE DIAGRAM ET–ESB6–MCC (480V)	EE02835 SHT. 3	A	16/12/15	ISSUED FOR DBM – AFE# 01–13283	NZ	AA	PG
NO.	REFERENCE DRAWING TITLE	REFERENCE DRAWING NO.	NO	DATE	REVISION	DRN	CHK	APPR

DRAWN BY N. ZENARI	SINGLE LINE DIAGRAM ET–ESB6–MCC (480V) WEST TANK AREA	SHEET SIZE A1
CHECKED BY A. ARAJI		SCALE NTS
APPROVED BY P. GIVENS	EDMONTON TERMINAL	DATE 16/10/24

PROJECT CODING	DRAWING NUMBER			
AFE	FACILITY ID	DOCUMENT NO	SHT NO	REV
01–13283	ET00	EE02835	04	A

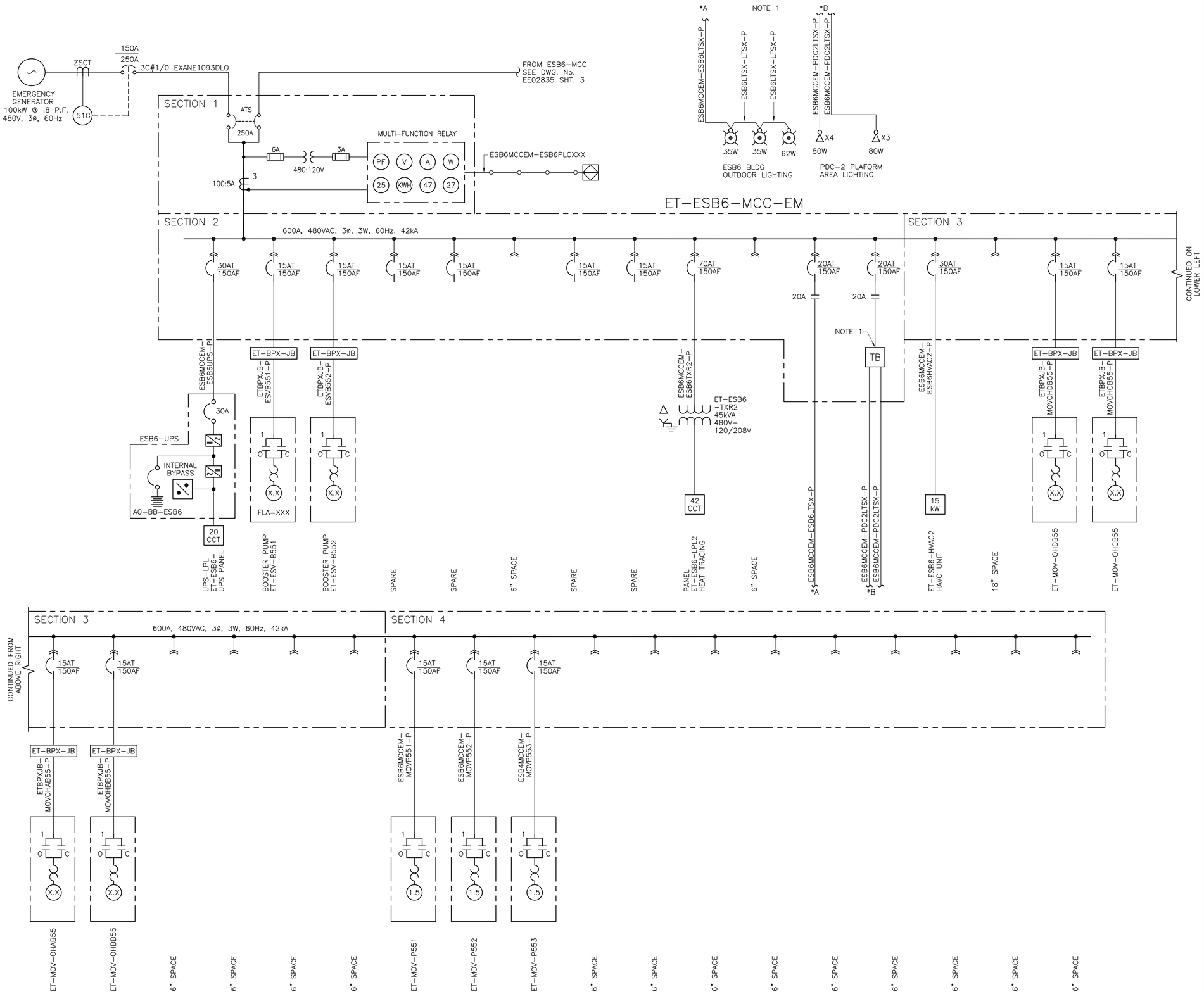

NOTES:

1. LIGHTING DESIGN TO BE DETERMINED IN DETAILED ENGINEERING.

ISSUED FOR REVIEW

FOR INFO ONLY

TYTEC

TRANS MOUNTAIN

NO.	REFERENCE DRAWING TITLE	REFERENCE DRAWING NO.	NO	DATE	REVISION	DRN	CHK	APPR
1	SINGLE LINE DIAGRAM ET-ESB6-MCC (480V)	EE02835 SHT. 4	A	16/12/15	ISSUED FOR DBM – AFE# 01-13283	NZ	AA	PG

DRAWN BY N. ZENARI	SINGLE LINE DIAGRAM ET-ESB6-MCC-EM (480V) WEST TANK AREA		SHEET SIZE A1
CHECKED BY A. ARAJI			SCALE NTS
APPROVED BY P. GIVENS	EDMONTON TERMINAL		DATE 16/10/24

PROJECT CODING	DRAWING NUMBER			
AFE	FACILITY ID	DOCUMENT NO	SHT NO	REV
01-13283	ET00	EE02835	05	A

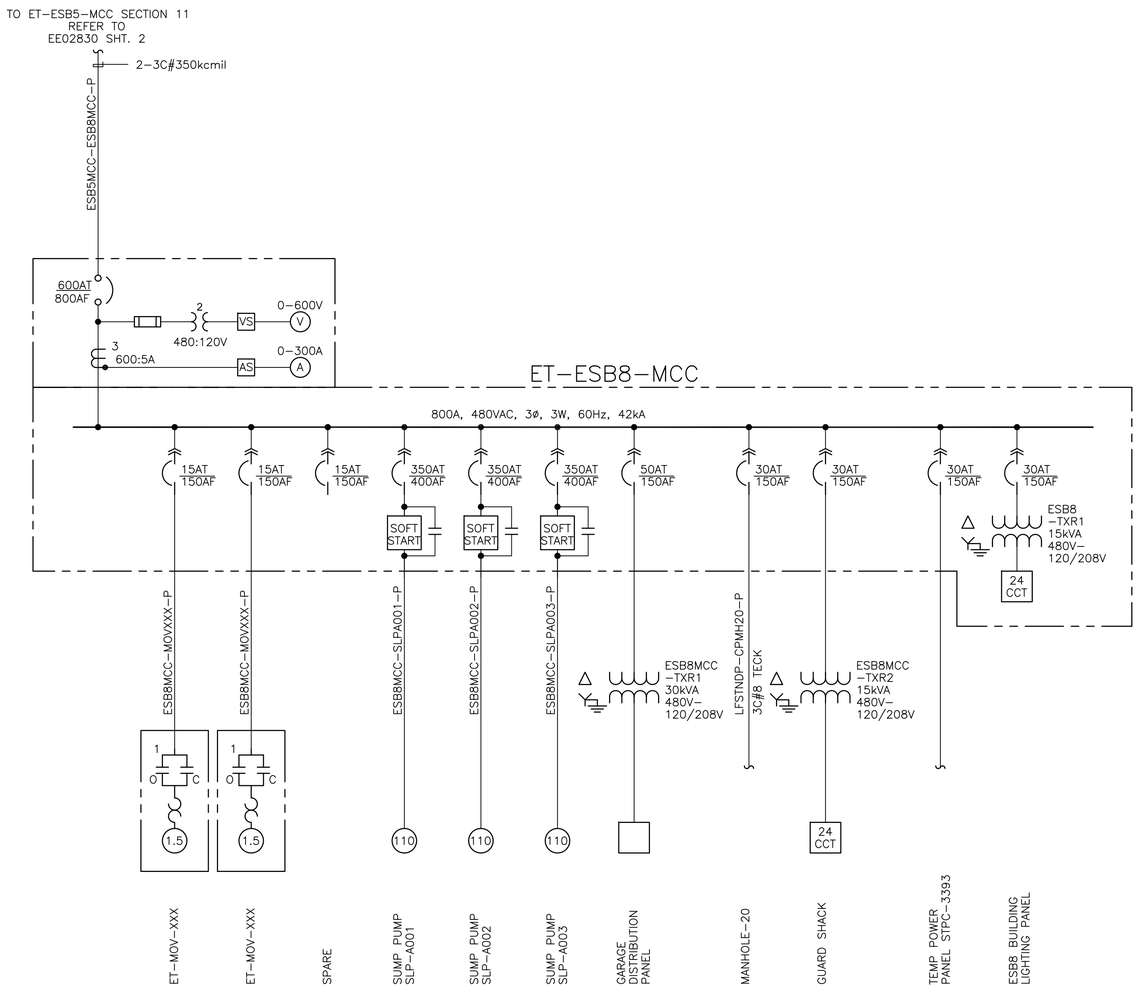

ISSUED FOR REVIEW

FOR INFO ONLY

TYTEC

TRANS MOUNTAIN

1	SINGLE LINE DIAGRAM ESB5-MCC	ET00-EE02830-02	A	16/12/15	ISSUED FOR DBM – AFE# 01-13283	NZ	AA	PG
NO.	REFERENCE DRAWING TITLE	REFERENCE DRAWING NO.	NO	DATE	REVISION	DRN	CHK	APPR

DRAWN BY N. ZENARI	SINGLE LINE DIAGRAM ESB8-MCC (480V) WEST LIFT STATION	SHEET SIZE A1
CHECKED BY A. ARAJI		SCALE NTS
APPROVED BY P. GIVENS	EDMONTON TERMINAL	DATE 16/10/24

PROJECT CODING	DRAWING NUMBER			
AFE	FACILITY ID	DOCUMENT NO	SHT NO	REV
01-13283	ET00	EE02837	01	a

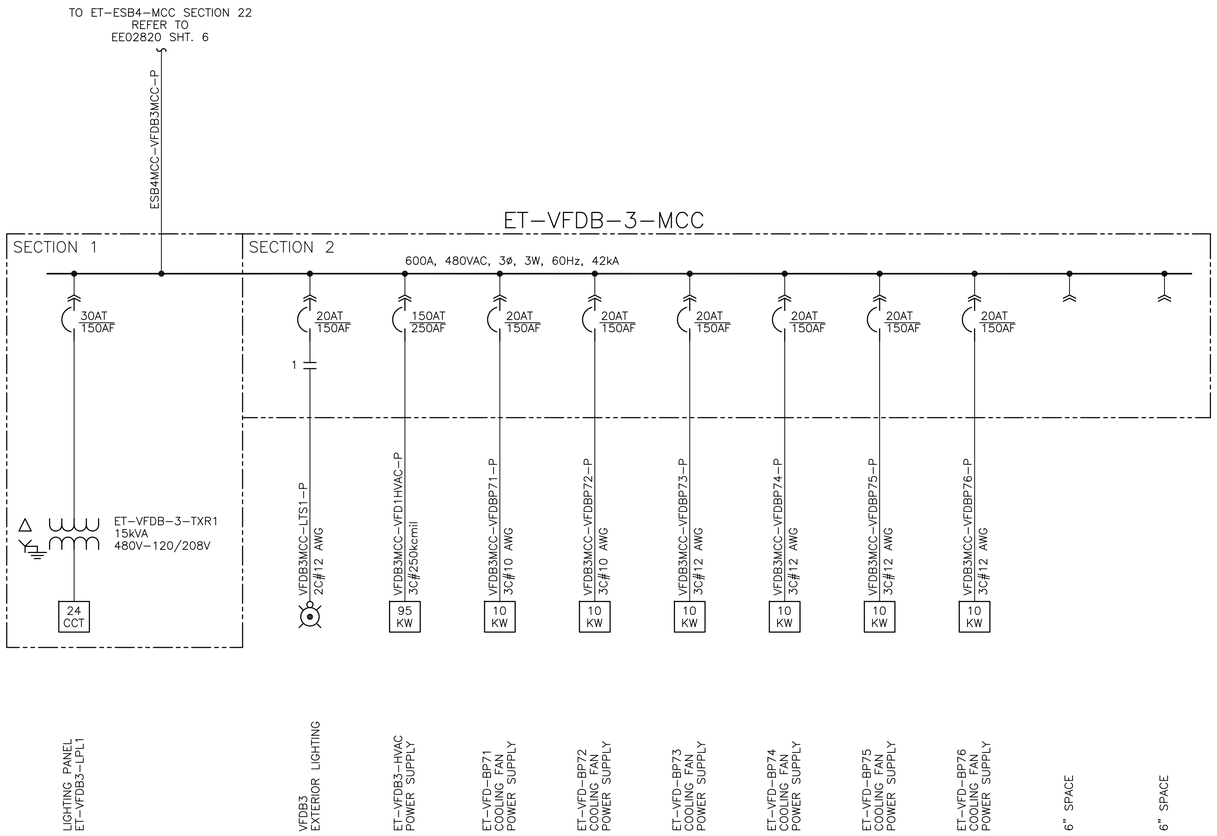

ISSUED FOR REVIEW

FOR INFO ONLY

TYTEC

TRANS MOUNTAIN

NO.	REFERENCE DRAWING TITLE	REFERENCE DRAWING NO.	NO	DATE	REVISION	DRN	CHK	APPR
			A	16/12/15	ISSUED FOR DBM – AFE# 01-13283	NZ	AA	PG

DRAWN BY N. ZENARI	SINGLE LINE DIAGRAM ET-VFDB3-MCC (480V) WEST TANK AREA		SHEET SIZE A1
CHECKED BY A. ARAJI			SCALE NTS
APPROVED BY P. GIVENS	EDMONTON TERMINAL		DATE 16/10/24

PROJECT CODING	DRAWING NUMBER			
AFE	FACILITY ID	DOCUMENT NO	SHT NO	REV
01-13283	ET00 —	EE02839	01	A

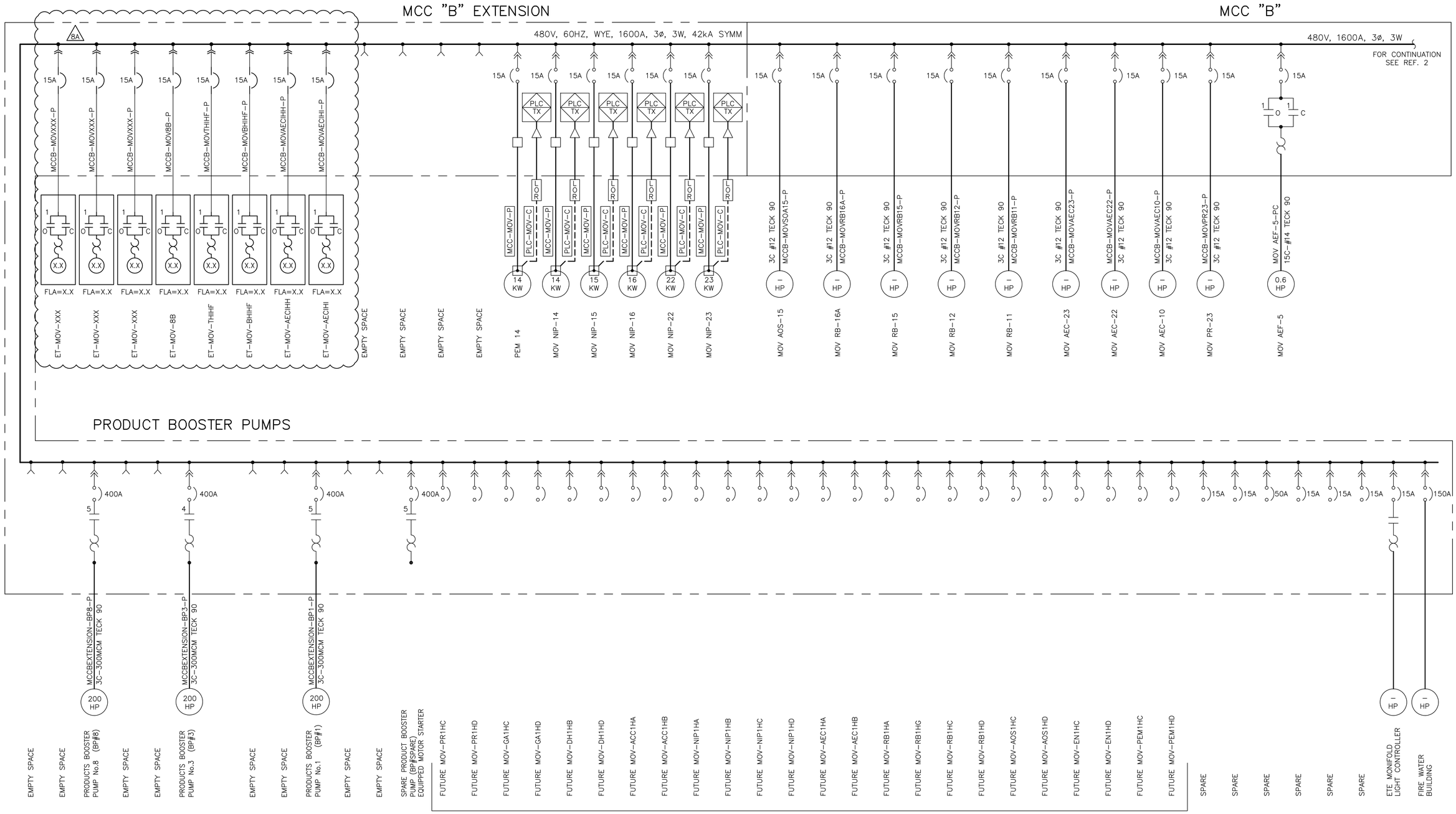

ISSUED FOR REVIEW

FOR INFO ONLY

NO	REFERENCE DRAWINGS	DRAWING NO
8	SINGLE LINE DIAGRAM MCC "B" (480V)	EE2110
7	PRODUCT BOOSTER PUMPS WIRING DIAGRAM	EE2101
6	PRODUCT BOOSTER PUMPS CONTROL SCHEMATICS	EE2100
5	CONDUIT & CABLE SCHEDULE	EE1205 SHEETS 1,2,4,8,9, & 12
4	KEY OF PLOT PLAN & DISTRIBUTION BLOCK DIAGRAM	EE1033
3	SINGLE LINE DIAGRAM 480V POWER DISTRIBUTION CENTRE (PDC)	EE103502
2	SINGLE LINE DIAGRAM 480V (MCC "B")	EE104102
1	MCC "B" ELEVATION	EE104101

NO	DATE	REVISION	DRN	CHK	APPR
8A	16/12/15	ISSUED FOR DBM – AFE# 01-13283	NZ	AA	PG
7	16/06/21	AS-BUILT, FMR #10641	RLY	NP	
6	16/04/04	AS-BUILT, FMR #10641	RLY	DL	

NO	DATE	REVISION	DRN	CHK	APPR
5	15/03/20	AS-BUILT, AFE# 01-13208	NB	TN	
4	14/11/03	AS-BUILT AFE#01-13395 EDMONTON NIPISI PH2 (CYBA13-2024)	TC	NL	PGR
3	13/08/07	IFC AFE# 01-13395 EDMONTON NIPISI PHASE II	TC	NL	
2	13/05/24	ISSUED FOR CONSTRUCTION AFE# 01-13208 ETE EXPANSION ADDENDUM 4	NC	SA	PAM
1	12/12/04	AS-BUILT AFE# 01-13161	JJK	GL	
0	12/10/02	IFC AFE# 01-13161	JJK	GL	

TYTEC

KINDER MORGAN CANADA

TRANS MOUNTAIN

DRAWN BY JJK	SINGLE LINE DIAGRAM 480V (MCC "B")	SHEET SIZE A1
CHECKED BY GL		SCALE N.T.S.
APPROVED BY	EDMONTON TERMINAL	DATE 12/10/02

DRAWING NUMBER					
AFE	WBS	FACILITY ID	DOCUMENT NO	SHT NO	REV
01-13283		ET00	EE1041	3	8A

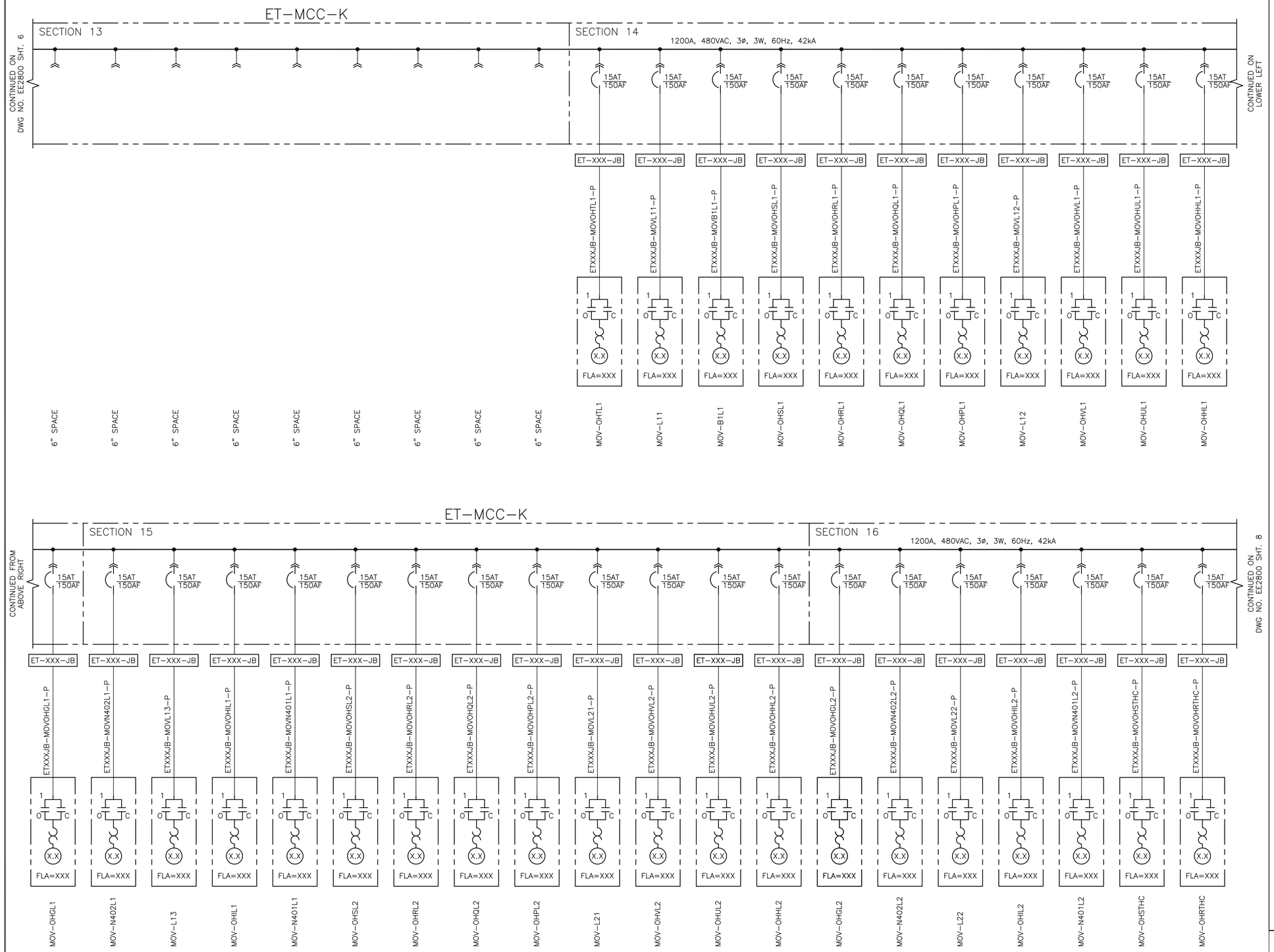

ISSUED FOR REVIEW

FOR INFO ONLY

TYTEC

TRANS MOUNTAIN

2	SINGLE LINE DIAGRAM ET–MCC–K (480V)	EE2800 SHT. 8						
1	SINGLE LINE DIAGRAM ET–MCC–K (480V)	EE2800 SHT. 6	A	16/12/15	ISSUED FOR DBM – AFE# 01–13283	NZ	AA	PG
NO.	REFERENCE DRAWING TITLE	REFERENCE DRAWING NO.	NO	DATE	REVISION	DRN	CHK	APPR

DRAWN BY N. ZENARI	SINGLE LINE DIAGRAM ET–ESB7 – MCC–K (480V) WEST TANK AREA DELIVERY MANIFOLD EDMONTON TERMINAL	SHEET SIZE A1
CHECKED BY A. ARAJI		SCALE NTS
APPROVED BY P. GIVENS		DATE 16/10/24

PROJECT CODING	DRAWING NUMBER			
AFE	FACILITY ID	DOCUMENT NO	SHT NO	REV
01–13283	ET00	EE2800	07	A

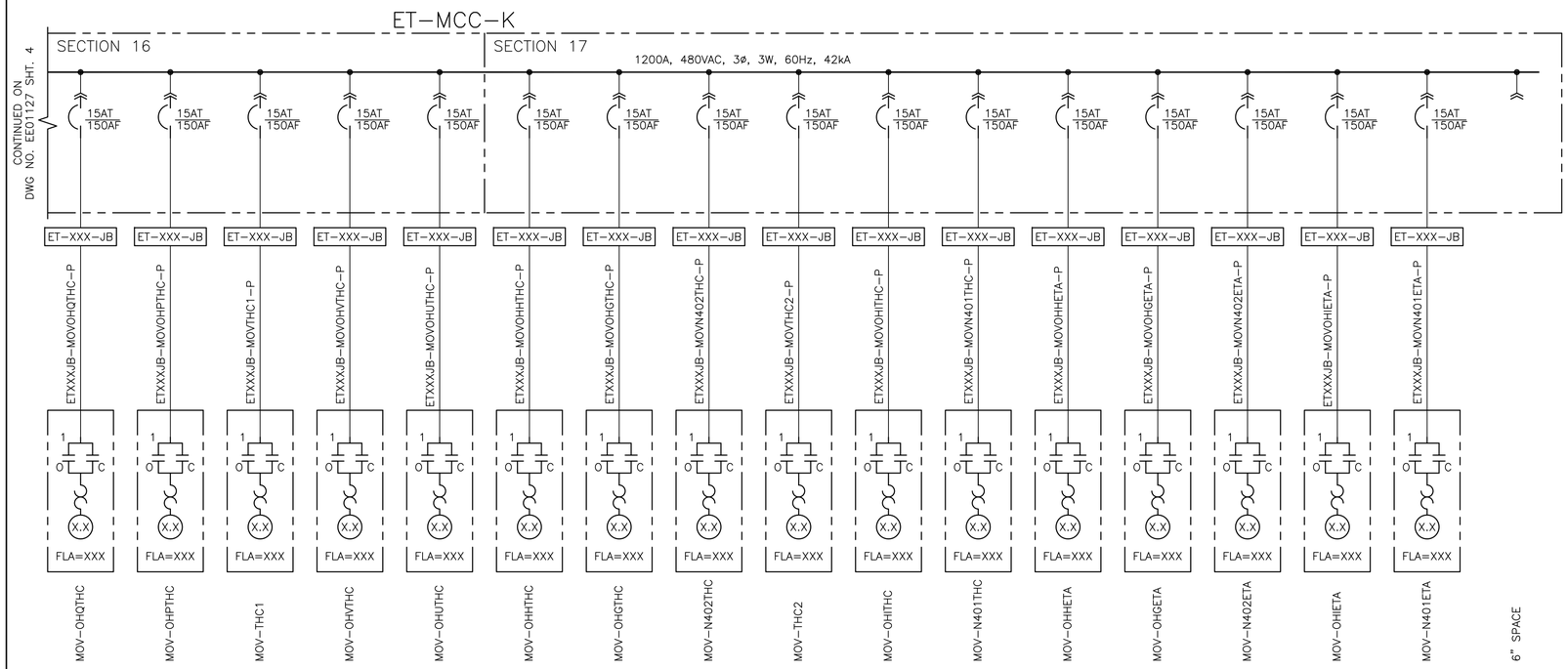

ISSUED FOR REVIEW

FOR INFO ONLY

TYTEC

TRANS MOUNTAIN

1	SINGLE LINE DIAGRAM ET–MCC–K (480V)	EE2800 SHT. 7	A	16/12/15	ISSUED FOR DBM – AFE# 01–13283	NZ	AA	PG
NO.	REFERENCE DRAWING TITLE	REFERENCE DRAWING NO.	NO	DATE	REVISION	DRN	CHK	APPR

DRAWN BY N. ZENARI	SINGLE LINE DIAGRAM ET–ESB7 – MCC–K (480V) WEST TANK AREA DELIVERY MANIFOLD EDMONTON TERMINAL	SHEET SIZE A1
CHECKED BY A. ARAJI		SCALE NTS
APPROVED BY P. GIVENS		DATE 16/10/24

PROJECT CODING	DRAWING NUMBER			
AFE	FACILITY ID	DOCUMENT NO	SHT NO	REV
01–13283	ET00	EE2800	08	A